WATERLINE CONSTRUCTION NOTES

1. ALIGNMENT, CENTERLINE CURVE DATA, AND STATIONING TO BE DETERMINED FROM APPROVED AND/OR RECORDED SUBDIVISION OR ROAD RIGHT-OF-WAY PLAT.
2. ALL WATERLINE CONSTRUCTION TO BE ACCOMPLISHED IN ACCORDANCE WITH THE LATEST EDITION OF THE TEXAS COMMISSION ON ENVIRONMENTAL QUALITY RULES AND REGULATIONS FOR PUBLIC WATER SYSTEMS.
3. ALL WATERLINES TO BE LOCATED INSIDE PUBLIC ROAD RIGHT-OF-WAYS AND PUBLIC EASEMENTS. CITY REPRESENTATIVE TO INSPECT & APPROVE PRIOR TO BACKFILL.
4. ALL WATER MAINS TO BE CLASS 150 (DR-18). PVC (AWWA C-900).
5. TWELVE (12) INCH OR SMALLER WATERMAINS TO HAVE A MINIMUM COVER OF FOUR (4) FEET. VARY FLOW LINE UNIFORMLY FROM DEPTH AND LOCATION SHOWN IN PLANS.
6. WATERLINE FITTINGS TO BE CAST OR DUCTILE IRON WITH POLYETHYLENE WRAP AS SPECIFIED UNLESS OTHERWISE NOTED.
7. MAINTAIN 12-INCH MINIMUM CLEARANCE AT CROSSINGS BETWEEN ALL WATERLINES AND ALL UTILITIES INCLUDING STORM SEWERS AND CULVERTS UNLESS OTHERWISE NOTED.
8. WATERLINES SHALL BE SAND-BEDDED AS SHOWN IN THE CITY OF TOMBALL DETAILS. (COT-WA-02) ALL WATER LINES TO BE INSPECTED BY CITY OF TOMBALL PRIOR TO BACKFILL.
9. WATERLINE TRENCHES UNDER OR WITHIN ONE (1) FOOT OF PROPOSED OR FUTURE PAVEMENT SHALL BE BACKFILLED PER THE CITY OF TOMBALL DETAILS (COT-WA-02).
10. ALL 2" THRU 12" GATE VALVES FOR THIS PROJECT SHALL BE IN ACCORDANCE WITH AWWA C509 AND BE MANUFACTURED BY MUELLER, AMERICAN-DARLING, OR APPROVED EQUAL RESILIANT SEAT GATE VALVES AND SHALL OPEN IN A COUNTER CLOCKWISE DIRECTION ONLY. VALVES ON ALL TAPPING SLEEVES ARE TO BE OF THE SAME TYPE.
11. VALVES TO BE LOCATED OPPOSITE PROPERTY CORNER WHERE APPROPRIATE.
12. ALL VALVE BOXES SHALL BE ADJUSTED TO FINISHED GRADE AFTER PAVING IS COMPLETE.
13. ALL FIRE HYDRANTS SHALL BE MANUFACTURED BY MUELLER OR AMERICAN-DARLING. EQUIP EACH FIRE HYDRANT WITH TWO (2) TWO AND ONE-HALF (2 ½) INCH NOMINAL INSIDE DIAMETER HOSE NOZZLES AND ONE (1) FOUR AND ONE-HALF (4 ½) INCH NOMINAL INSIDE DIAMETER PUMPER NOZZLE WITH NATIONAL STANDARD THREADS ON EACH NOZZLE. SUPPLY STORZ CONNECTOR & PRESSURE CAP FOR PUMPER NOZZLE.
14. CONTRACTOR SHALL PROVIDE ADEQUATE THRUST BLOCKING TO WITHSTAND TEST PRESSURES SPECIFIED BY THE TEXAS COMMISSION ON ENVIRONMENTAL QUALITY AND THE CITY OF TOMBALL.
15. ALL WATERLINE TESTING SHALL BE WITNESSED AND APPROVED BY THE CITY OF TOMBALL.
16. 12 GAUGE LOCATOR WIRE TO BE INSTALLED ON ALL WATER AND GAS LINES & FORCE MAINS. TO BE ACCESSIBLE AT VALVE STACKS.
17. ALL TS&V SHALL BE FULL BODY – CAST IRON OR APPROVED STAINLESS STEEL OR DUCTILE IRON.
18. 1 WATER SAMPLE PER 1000 FEET SHALL BE SUBMITTED TO A TEXAS DEPARTMENT OF HEALTH APPROVED LABORATORY AND SHALL BE FREE OF ANY CONTAMINATES, PRIOR TO BEING PUT IN SERVICE.
19. DISINFECTION OF NEW AND REPAIRED WATER MAINS SHALL BE IN CONFORMANCE WITH AWWA C651. ALL NEW WATER MAINS SHALL BE DISINFECTED BEFORE THEY ARE PLACED IN SERVICE. ALL WATER MAINS TAKEN OUT OF SERVICE FOR INSPECTING, REPAIRING OR OTHER ACTIVITY, WHICH MIGHT LEAD TO CONTAMINATION OF WATER, SHALL BE DISINFECTED BEFORE THEY ARE RETURNED TO SERVICE. (NO SEP. PAY)
20. CONTRACTOR TO INSTALL 4" X 4" BLUE RELECTORIZED PAVEMENT MARKERS 6" OFF CENTER OF ROADWAY ON FIRE HYDRANT SIDE OF STREET. RAY-O-LITE OR EQUAL.
21. WATERLINE 8" OR GREATER SHALL BE CONSTRUCTED SUCH THAT ALL CROSSINGS WITH SANITARY SEWER OR SANITARY SEWER LEADS SHALL CENTER ONE FULL SECTION OF WATERLINE AT THE SANITARY SEWER CROSSING. WATERLINE SHALL BE AT LEAST 2 FEET ABOVE SANTIARY LINE. WHERE WATERLINE CROSSES UNDER SANITARY SEWER LINES. WATERLINE SEGMENT SHALL BE ENCASED IN PIPE AT LEAST TWO NOMINAL PIPE DIAMETERS LARGER THAN WATERLINE AND MAINTAIN 1 FOOT VERTICAL CLEARANCE FROM SANITARY LINE.
22. WHERE WATERLINE CROSSES UNDER SANITARY SEWER LINE, BOTH SEGMENTS MUST PASS A PRESSURE AND LEAKAGE TEST AS SPECIFIED IN AWWA C600 STANDARDS.
23. ALL VALVE BOXES SHALL BE ERECTED PLUMBED & BE FREE OF DEBRIS.
24. PROVIDE BACKFLOW PREVENTOR BASED ON APPROPIATE APPLICATIONS (I.E. IRRIGATION, DOMESTIC, FIRE)

NOT TO SCALE

CITY OF TOMBALL
ENGINEERING & PLANNING DEPARTMENT

WATERLINE CONSTRUCTION NOTES

APPROVED BY COT:

ENGINEERING & PLANNING DEPARTMENT
EFFECTIVE JULY 1, 2010

SHEET 001 OF 001 | DWG NO: COT WA-01

CAD FILE PATH:

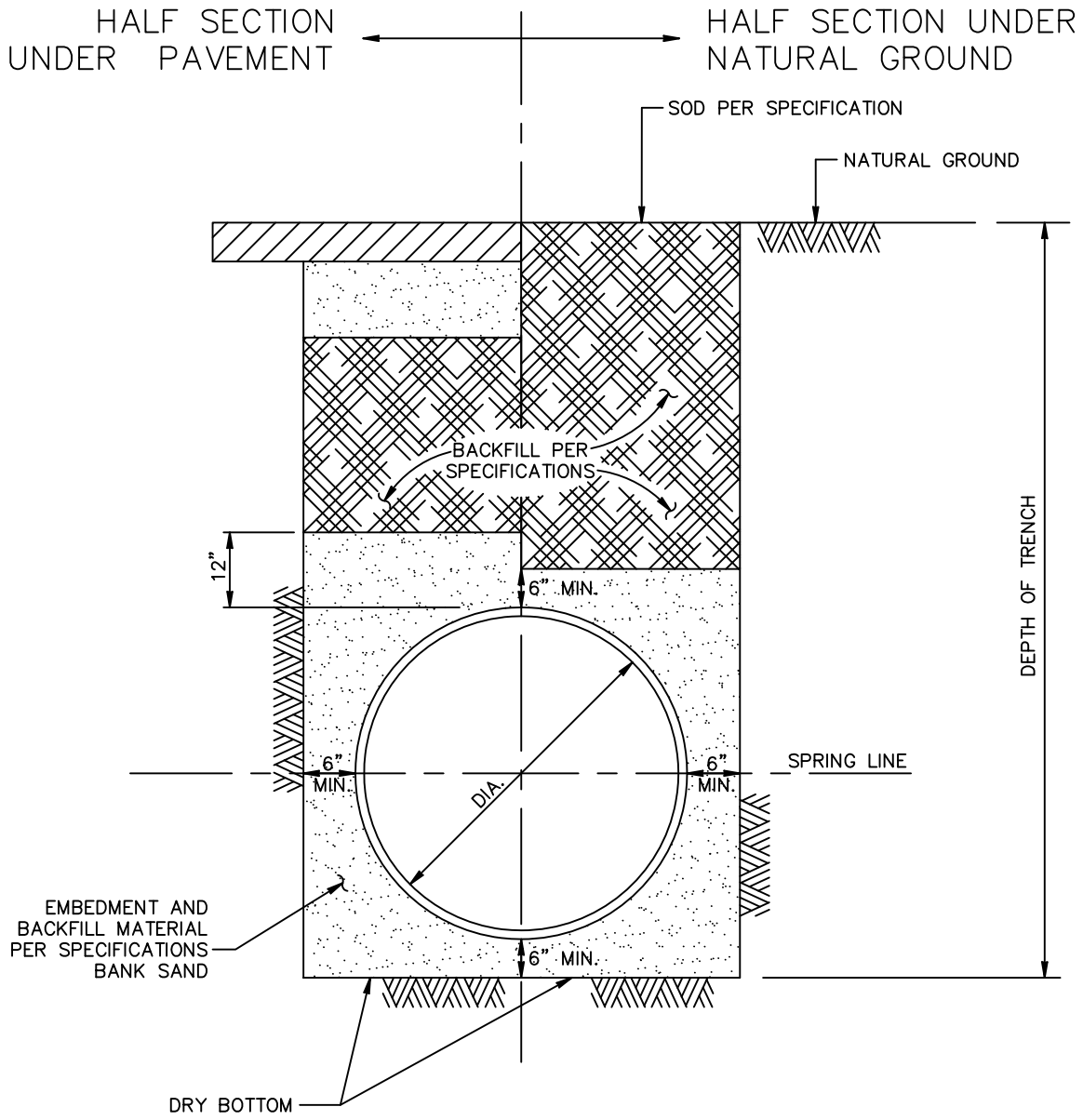

NOT TO SCALE

CITY OF TOMBALL
ENGINEERING & PLANNING DEPARTMENT

WATER DISTRIBUTION MAIN BEDDING AND BACKFILL FOR OPEN CUT TRENCHES

APPROVED BY COT:

ENGINEERING & PLANNING DEPARTMENT
EFFECTIVE JULY 1, 2010

SHEET 001 OF 001 | DWG NO: COT WA-02

CAD FILE PATH:

CAD FILE PATH:

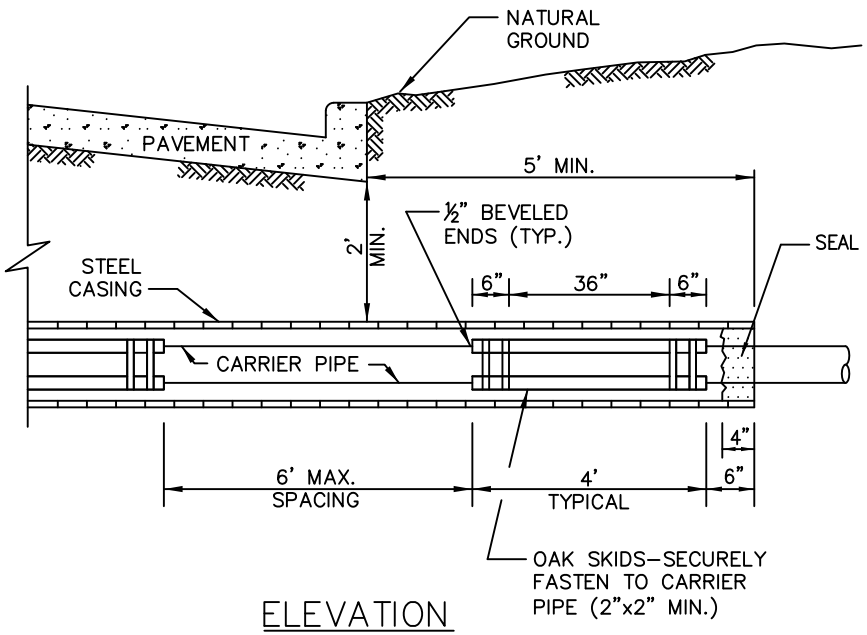

ELEVATION

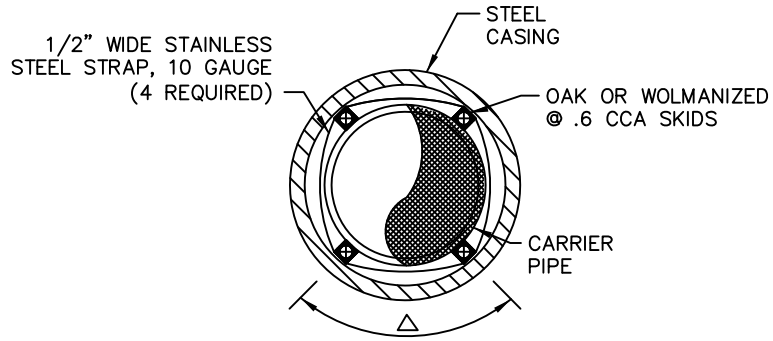

CASING SCHEDULE		
CARRIER PIPE	NOMINAL CASING	MIN. WALL THICKNESS (IN.)
6"	12"	0.11
8"	14"	0.15
10"	16"	0.18
12"	18"	0.20

NOTES:

1. SPACING BETWEEN TIMBERS:
   = 90° FOR 12" AND UNDER,
   = 60° FOR PIPE OVER 12".
2. CASING SIZE AND THICKNESS SHALL CONFORM TO THE MINIMUM REQUIREMENTS AS SHOWN ON CASING SCHEDULE, OTHER PERMITS AS REQUIRED.
3. MAINTAIN ½" MINIMUM CLEARANCE BETWEEN THE MAXIMUM OUTSIDE DIAMETER OF CARRIER PIPE AND CASING AT ALL LOCATIONS.
4. DIMENSIONS ARE APPROXIMATE ONLY. CONTRACTOR SHALL INSTALL ADEQUATELY SIZED CASING TO ACCOMMODATE THE CARRIER PIPE.

NOT TO SCALE

CITY OF TOMBALL
ENGINEERING & PLANNING DEPARTMENT

WATER LINE CROSSING STEEL CASING & STEEL CASING SCHEDULE

APPROVED BY COT:

ENGINEERING & PLANNING DEPARTMENT
EFFECTIVE JULY 1, 2010

SHEET 001 OF 001 | DWG NO: COT WA–03

CAD FILE PATH:

MIN. PIPE WALL THICKNESS	
4"	– 0.250"
6"	– 0.280"
8"	– 0.322"
12" AND LARGER	– 0.375"

NOTES:

1. ALL MATERIALS AND COATINGS TO BE IN ACCORDANCE WITH ENGINEERING & PLANNING DEPARTMENT SPECIFICATIONS
2. OFFSET SETIONS SHALL BE THRUST–BLOCKED IN ACCORDANCE WITH DWG NO COT–WA–07, IF NECESSARY ALL THREAD RODS SHALL BE USED TO RESTRAIN THE JOINTS.

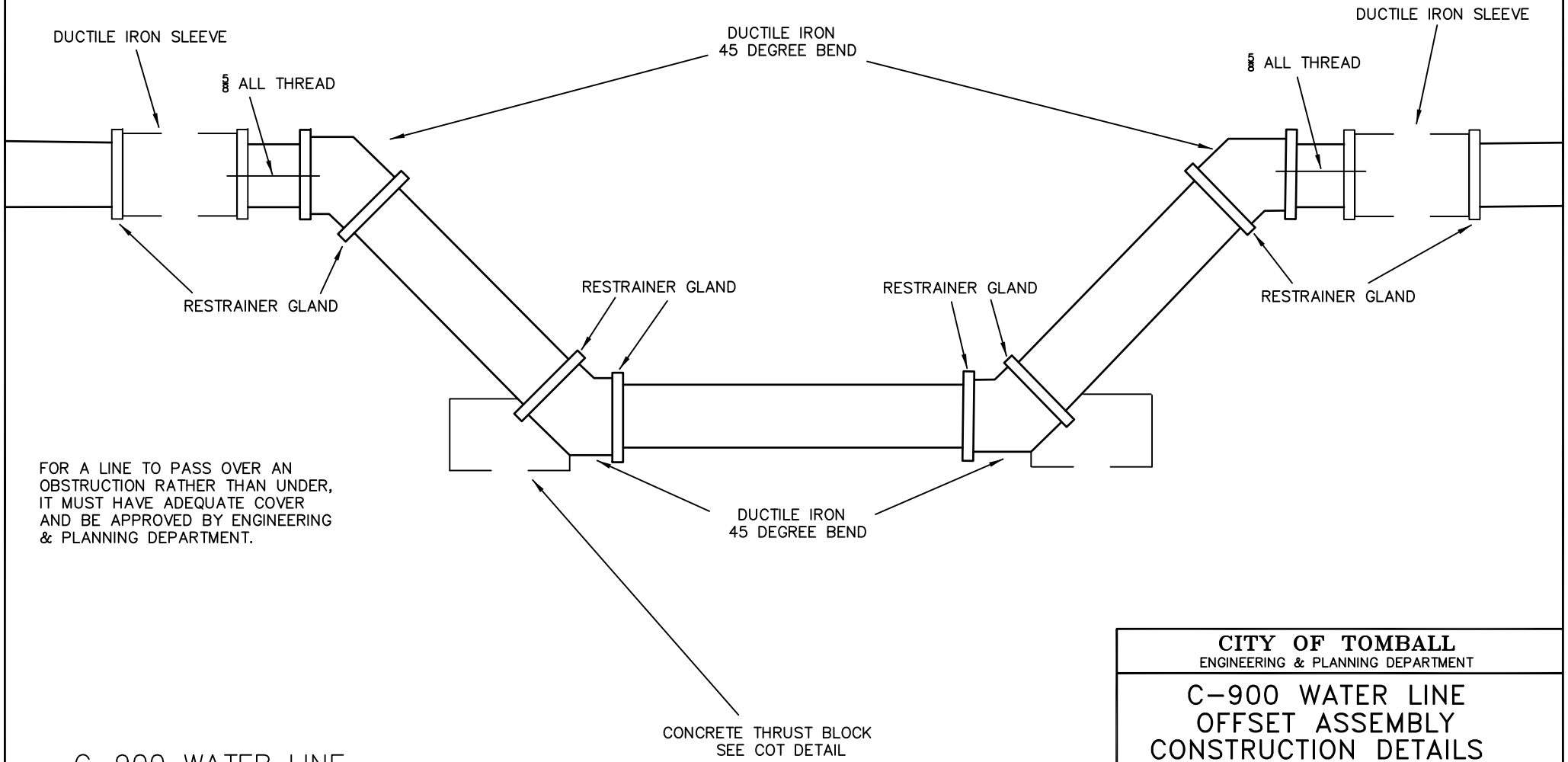

FOR A LINE TO PASS OVER AN OBSTRUCTION RATHER THAN UNDER, IT MUST HAVE ADEQUATE COVER AND BE APPROVED BY ENGINEERING & PLANNING DEPARTMENT.

C–900 WATER LINE
OFFSET ASSEMBLY

CITY OF TOMBALL
ENGINEERING & PLANNING DEPARTMENT

C–900 WATER LINE
OFFSET ASSEMBLY
CONSTRUCTION DETAILS

APPROVED BY COT:

ENGINEERING & PLANNING DEPARTMENT
EFFECTIVE JULY 1, 2010

SHEET 001 OF 001 | DWG NO: COT WA–04

CAD FILE PATH:

MIN. PIPE WALL THICKNESS	
4"	– 0.250"
6"	– 0.280"
8"	– 0.322"
12" AND LARGER	– 0.375"

NOTES:

1. ALL MATERIALS AND COATINGS TO BE IN ACCORDANCE WITH DEPARTMENT OF ENGINEERING & PLANING SPECIFICATIONS
2. INSULATED JOINT TO BE MADE UP USING INSULATING GASKETS, PLASTIC BOLT SLEEVES AND WASHERS OF INSULATING GASKET MATERIAL BACKED WITH ZINC–PLATED WASHERS, OR OTHER METHODS APPROVED SPECIFICALLY BY THE ENGINEERING & PLANNING DEPARTMENT.
3. NO FIELD FABRICATION OR INTERIOR COATING OF STEEL WATER PIPE OFFSETS ALLOWED.
4. OFFSET SETIONS SHALL BE THRUST–BLOCKED IN ACCORDANCE WITH DWG NO COT–WA–07, IF NECESSARY ALL THREAD RODS SHALL BE USED TO RESTRAIN THE JOINTS.

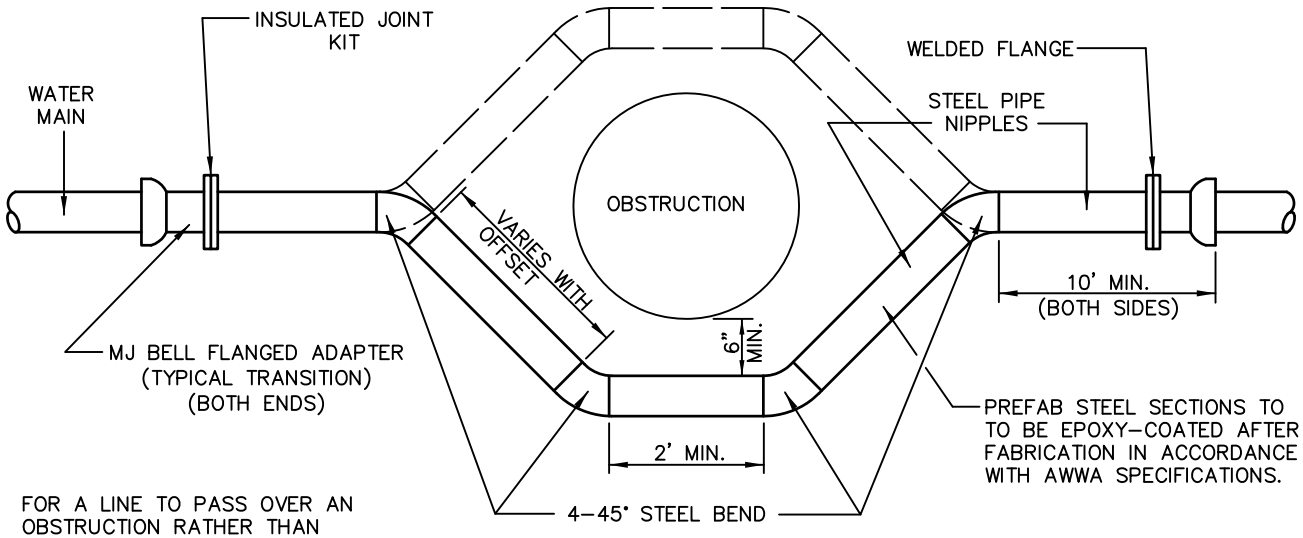

FOR A LINE TO PASS OVER AN OBSTRUCTION RATHER THAN UNDER, IT MUST HAVE ADEQUATE COVER AND BE APPROVED BY ENGINEERING & PLANNING DEPARTMENT.

STEEL WATER PIPE OFFSET ASSEMBLY

CITY OF TOMBALL
ENGINEERING & PLANNING DEPARTMENT

STEEL WATER LINE OFFSET ASSEMBLY CONSTRUCTION DETAILS

APPROVED BY COT:

ENGINEERING & PLANNING DEPARTMENT
EFFECTIVE JULY 1, 2010

SHEET 001 OF 001 | DWG NO: COT WA–05

NOTES:

POLYETHELENE WRAP FOR IRON PIPE

NOTE:

1. POLYETHYLENE FILM SHALL BE USED AS A WRAP TO PROTECT CAST IRON AND OTHER METALS INS A CORROSIVE SOIL ENVIRONMENT.

2. AN 8 MIL POLYETHYLENE FILM WRAP SHALL BE REQUIRED AROUND ALL METAL PIPE AND APPURTENANCES (EXCEPT FIRE HYDRANTS).

3. POLYETHYLENE FILM SHALL BE FURNISHED AND INSTALLED EITHER IN TUBULAR FORM PRIOR TO LOWERING THE PIPE IN TRENCH OR IN SHEET FORM.

4. POLYETHYLENE TUBE ENCASEMENT SHALL CONFORM WITH THE MINIMUM REQUIREMENTS OF "POLYETHYLENE ENCASEMENT FOR GRAY AND DUCTILE CAST-IRON PIPING FOR WATER AND OTHER LIQUIDS", ANSI/AWWA C105, CURRENT REVISION. SOILS WITHIN A PROJECT SHALL BE TESTED IN ACCORDANCE WITH APPENDIX A OF ANSI/AWWA C105 TO ADEQUATELY DETERMINE THE REQUIREMENTS FOR ENCASEMENT.

BENDS, TEES & PLUGS FOR PIPE OF VARIOUS SIZES

SIZE	90° BEND		45° BEND		22½° BEND		TEES		PLUGS	
	A	B	A	B	A	B	A	B	A	B
2½"	12"	7"	6"	7"	6"	6"	7"	8"	8"	14"
6"	16"	10"	9"	10"	6"	12"	10"	12"	10"	21"
8"	22"	13"	12"	13"	8"	10"	13"	16"	12"	29"
10"	26"	17"	14"	17"	10"	13"	16"	20"	14"	36"
12"	29"	21"	16"	21"	11"	16"	18"	24"	16"	41"
14"	35"	24"	19"	24"	12"	20"	22"	27"	18"	48"
16"	38"	27"	21"	27"	12"	24"	24"	30"	20"	54"

CONSTRUCTION NOTES:

1. WATER LINE LESS THAN 6" (IN.) SHALL BE AWWA C-900 DR14 CLASS 200 WATER LINE GREATER THAN 6" (IN.) IN ø SHALL BE AWWA C-900 DR 18 CLASS 150 WATER LINE WITH A DEPTH OF COVER 12' TO 24' SHALL BE AWWA C-905

2. ALL FLUSHING VALVES AND GATE VALVES TO BE AMERICAN WATER WORKS ASSOC. (AWWA) STANDARD COUNTERCLOCKWISE OPENING WITH NON-RISING STEM DESIGN.

3. THE MAXIMUM ALLOWABLE SIZE OF A TAPPING SLEEVE AND VALVE ON AN EXISTING PIPE IS ONE SIZE SMALLER THEN THE PIPE DIAMETER OF THE MAIN TO BE TAPPED.

4. ALL DUCTILE IRON PIPE SHALL BE CLASS 50 MORTAR LINED. NO A.C. PIPE WILL BE ALLOWED AND ALL DUCTILE IRON FITTINGS SHALL BE MORTAR LINED PUSHON OR MECHANICAL JOINTS.

5. ALL BACKFILL WITHIN THE R.O.W. SHALL BE COMPACTED TO 95% STANDARD PROCTOR DENSITY.

NOT TO SCALE

CITY OF TOMBALL
ENGINEERING & PLANNING DEPARTMENT

POLYETHYLENE WRAP DETAIL & TABLE FOR BENDS, TEES, & PLUGS

APPROVED BY COT:

ENGINEERING & PLANNING DEPARTMENT
EFFECTIVE JULY 1, 2010

SHEET 001 OF 001 | DWG NO: COT WA-06

CAD FILE PATH:

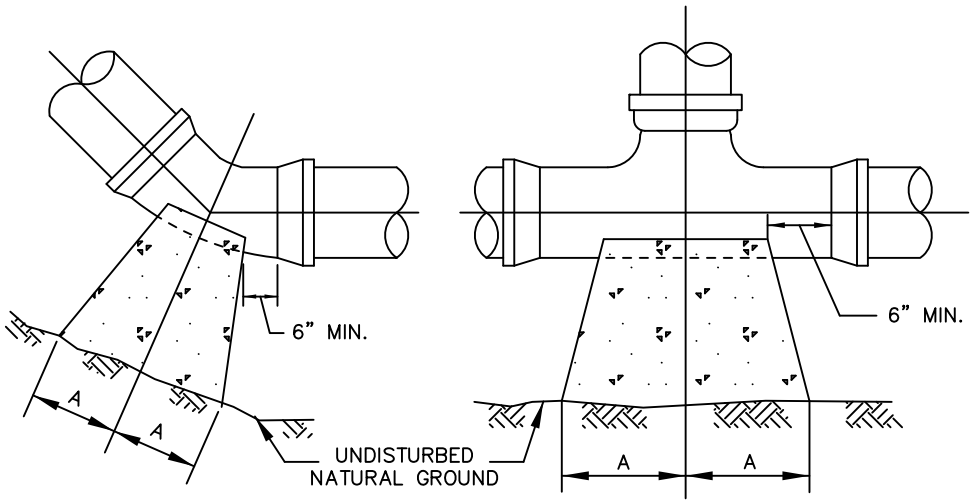

BEND

TEE

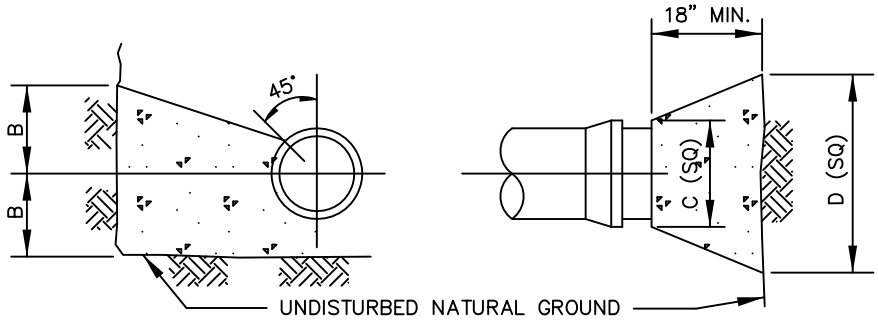

BEND & TEE

PLUG

THRUST BLOCK DETAIL

BENDS, TEES & PLUGS FOR PIPE OF VARIOUS SIZES

SOIL TYPE	SIZE	90°BEND		45°BEND		22½°BEND		TEES		PLUGS	
		A	B	A	B	A	B	A	B	A	B
TYPE I 4000 PSF SOIL	6"	8"	10"	6"	8"	3"	8"	8"	8"	10"	15"
	8"	12"	12"	8"	10"	5"	9"	9"	12"	12"	20"
	10"	16"	14"	10"	12"	6"	10"	11"	14"	14"	25"
	12"	19"	16"	12"	14"	8"	11"	14"	16"	16"	30"
	14"	23"	18"	14"	16"	10"	12"	16"	18"	18"	34"
	16"	26"	20"	16"	18"	11"	13"	18"	20"	20"	38"
TYPE II 2000 PSF SOIL	6"	16"	10"	9"	10"	6"	8"	10"	12"	10"	21"
	8"	22"	13"	12"	13"	8"	10"	13"	16"	12"	29"
	10"	26"	17"	14"	17"	10"	13"	16"	20"	14"	36"
	12"	29"	21"	16"	21"	11"	16"	18"	24"	16"	41"
	14"	35"	24"	19"	24"	12"	20"	22"	27"	18"	48"
	16"	38"	27"	21"	27"	12"	24"	24"	30"	20"	54"

NOTE:
BASED ON 100 PSI STATIC PRESSURE PLUS AWWA HAMMER.
ALL BEARING SURFACES TO BE CARRIED TO UNDISTURBED GROUND.

NOT TO SCALE

CITY OF TOMBALL
ENGINEERING & PLANNING DEPARTMENT

WATER LINE
THRUST BLOCK FOR
BENDS, TEES, & PLUGS

APPROVED BY COT:

ENGINEERING & PLANNING DEPARTMENT
EFFECTIVE JULY 1, 2010

SHEET 001 OF 001 | DWG NO: COT WA-07

CAD FILE PATH:

CAD FILE PATH:

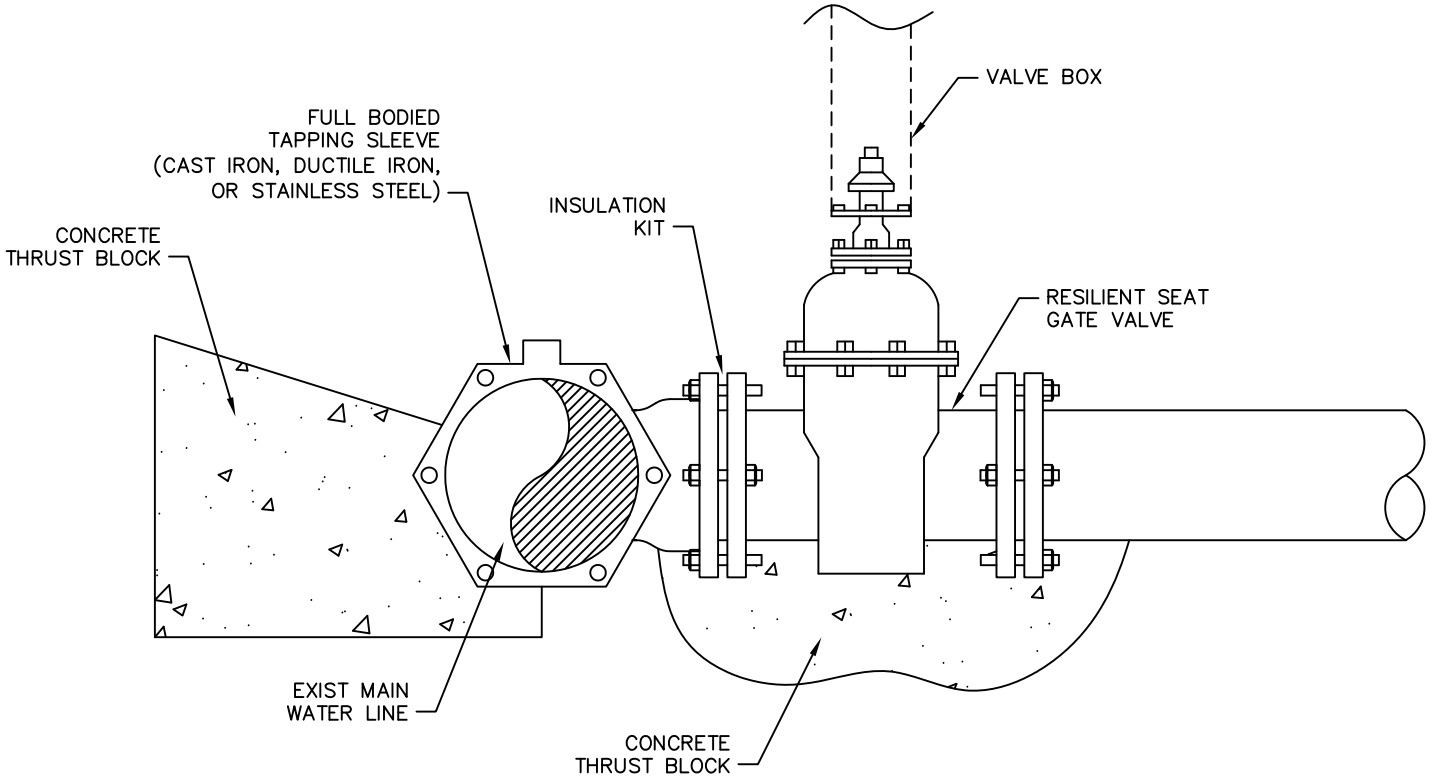

MAIN LINE TAPPING
SLEEVE & VALVE

NOT TO SCALE

CITY OF TOMBALL
ENGINEERING & PLANNING DEPARTMENT

MAIN LINE
TAPPING SLEEVE
& VALVE

APPROVED BY COT:

ENGINEERING & PLANNING DEPARTMENT
EFFECTIVE JULY 1, 2010

SHEET 001 OF 001 | DWG NO: COT WA-08

CAD FILE PATH:

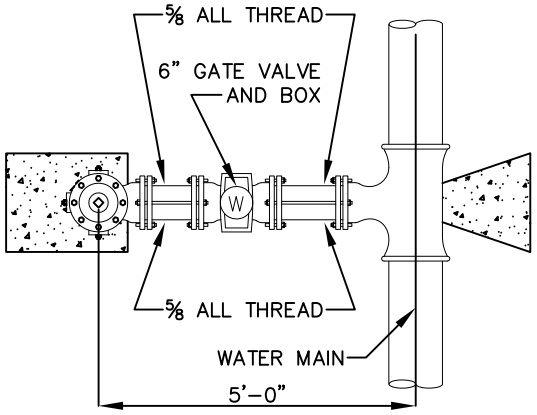

PLAN

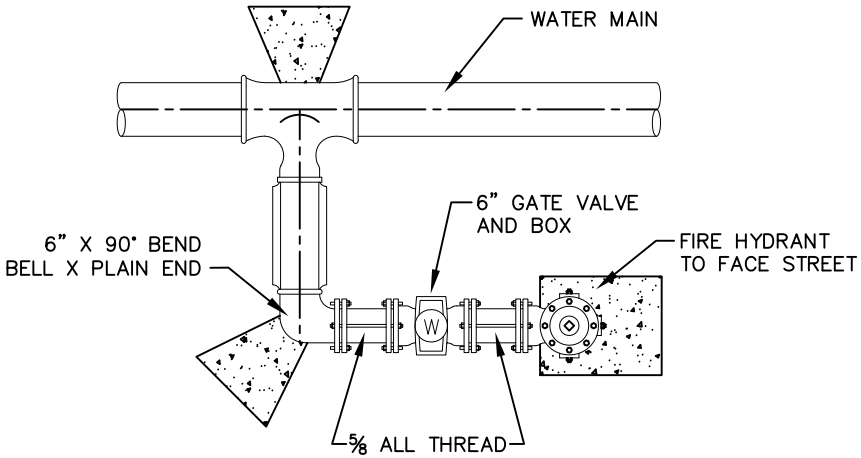

ALTERNATE PLAN

NOTE:
DEPTH MAY VARY, BUT THERE WILL BE NO ADDITIONAL PAY FOR ADDED DEPTH.

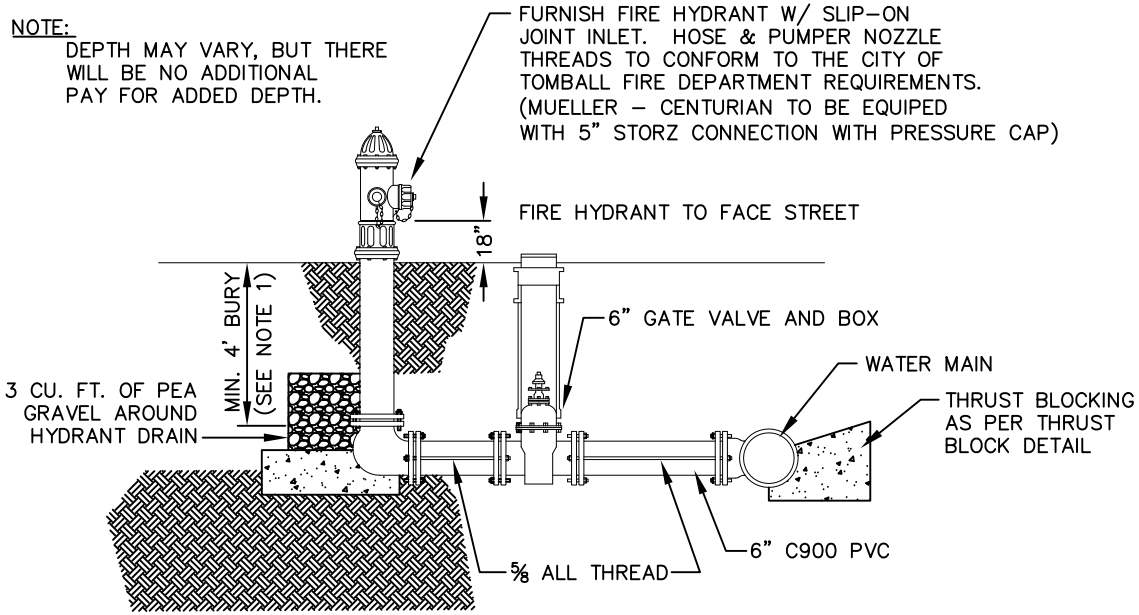

SECTION

NOT TO SCALE

CITY OF TOMBALL
ENGINEERING & PLANNING DEPARTMENT

FIRE HYDRANT DETAIL

APPROVED BY COT:

ENGINEERING & PLANNING DEPARTMENT
EFFECTIVE JULY 1, 2010

SHEET 001 OF 001 | DWG NO: COT WA-09

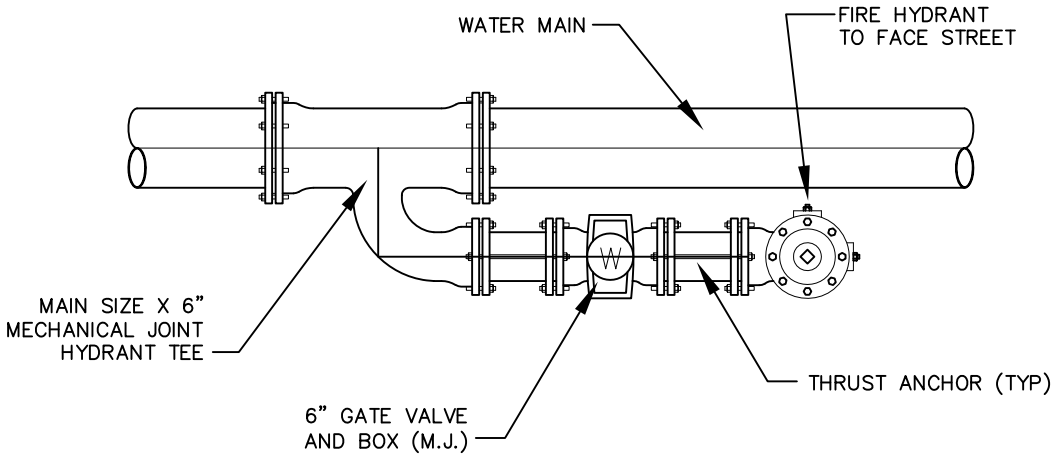

ALTERNATE FIRE HYDRANT PLAN

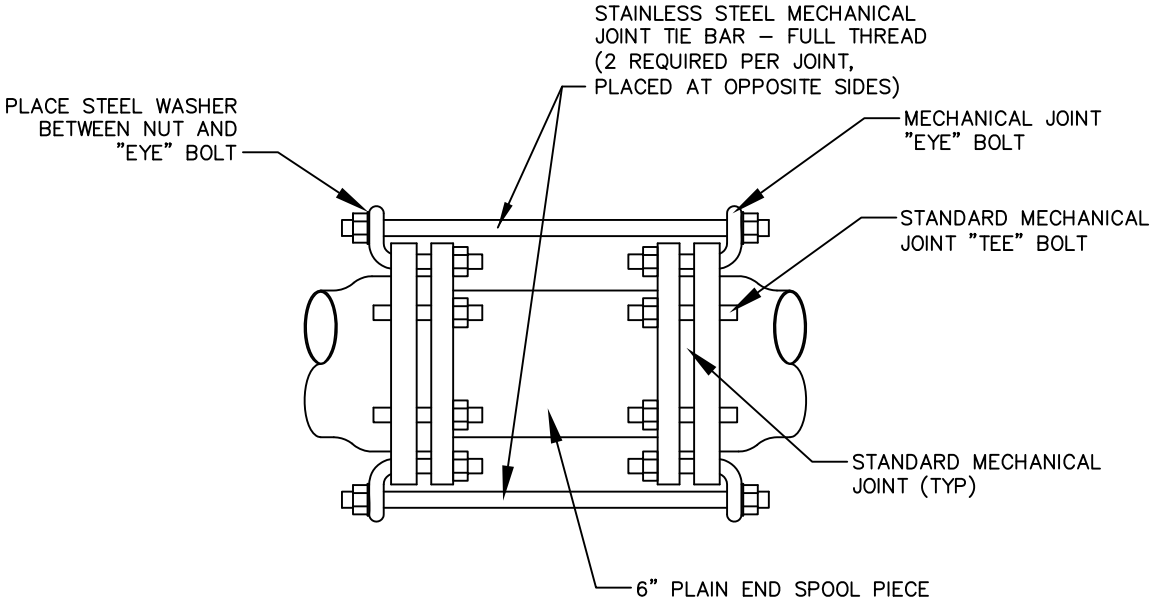

THRUST ANCHOR DETAIL

NOT TO SCALE

CITY OF TOMBALL
ENGINEERING & PLANNING DEPARTMENT

ALTERNATE
FIRE HYDRANT
PLAN

APPROVED BY COT:

ENGINEERING & PLANNING DEPARTMENT
EFFECTIVE JULY 1, 2010

SHEET 001 OF 001 | DWG NO: COT WA-10

CAD FILE PATH:

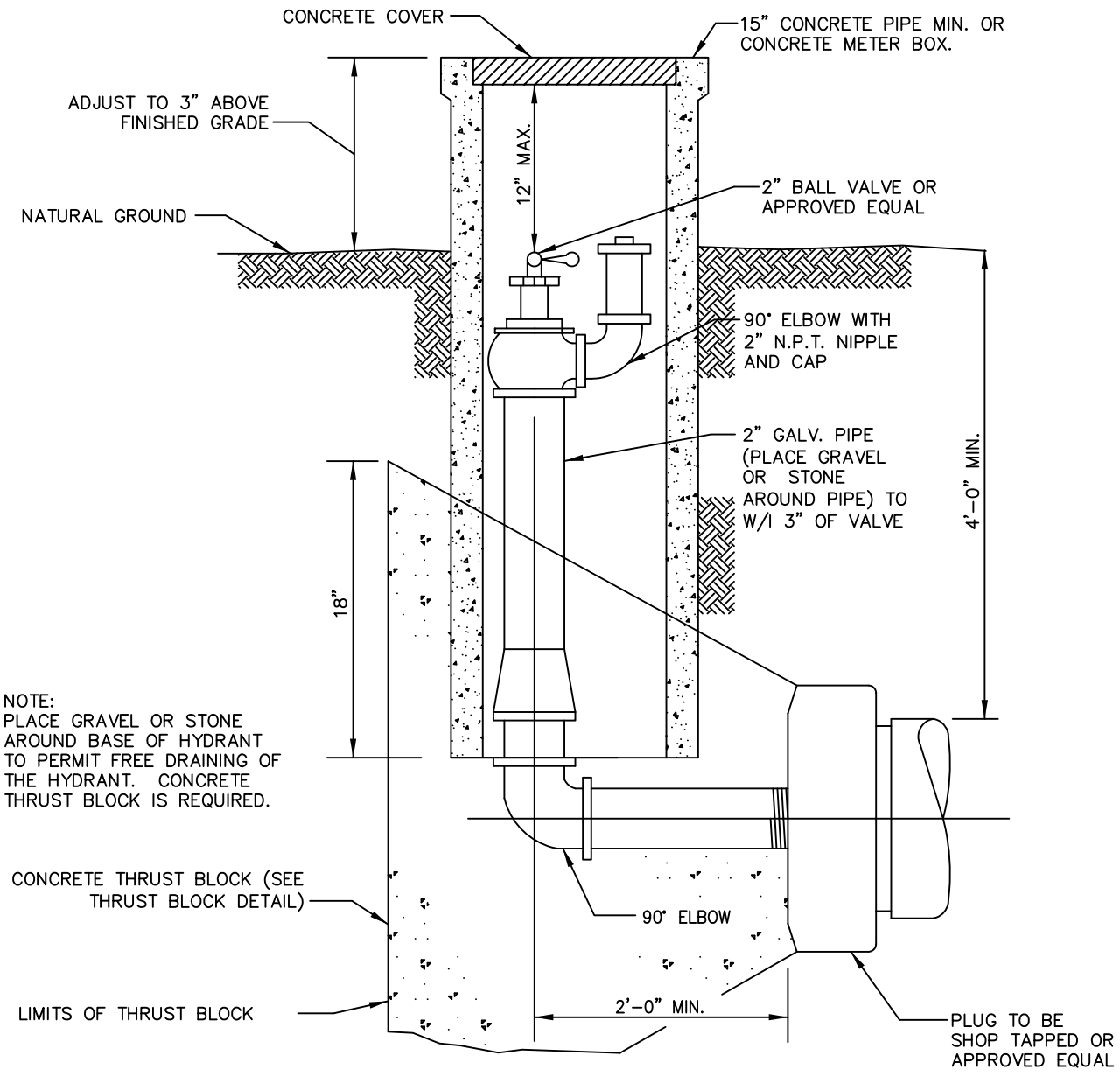

2" BLOW OFF VALVE ASSEMBLY

NOT TO SCALE

CITY OF TOMBALL
ENGINEERING & PLANNING DEPARTMENT

WATER LINE
2" BLOW OFF VALVE
ASSEMBLY DETAIL

APPROVED BY COT:

ENGINEERING & PLANNING DEPARTMENT
EFFECTIVE JULY 1, 2010

SHEET 001 OF 001 | DWG NO: COT WA-11

CAD FILE PATH:

CAD FILE PATH:

NOTE:
MATERIAL – GRAY CAST IRON
PAINT – DIP IN COAL TAR
PITCH VARNISH

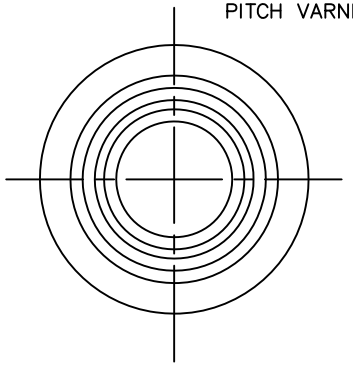

PLAN OF CASTING "A"

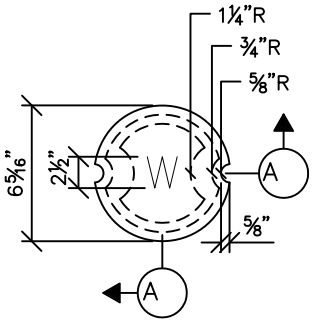

PLAN OF COVER

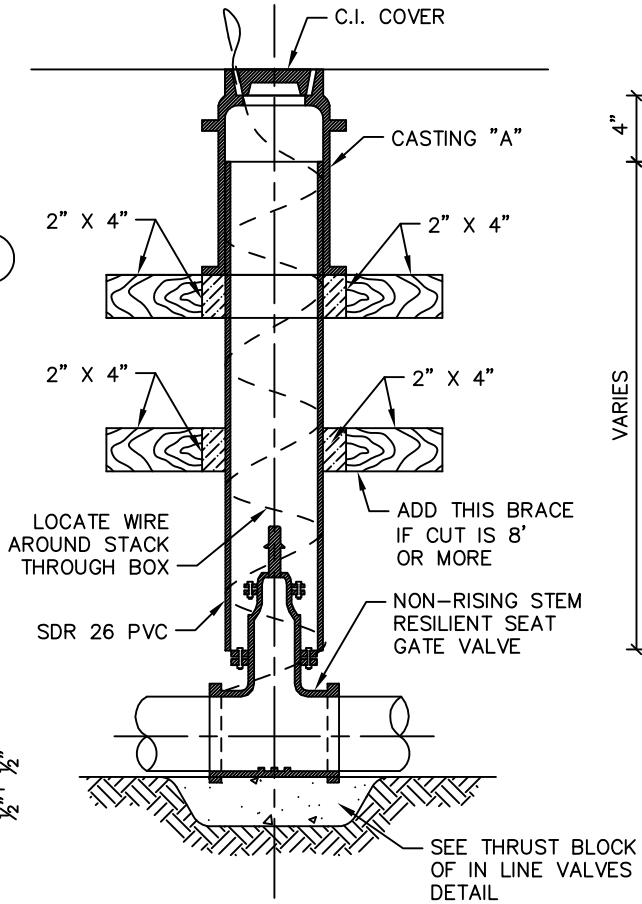

SECTION B–B

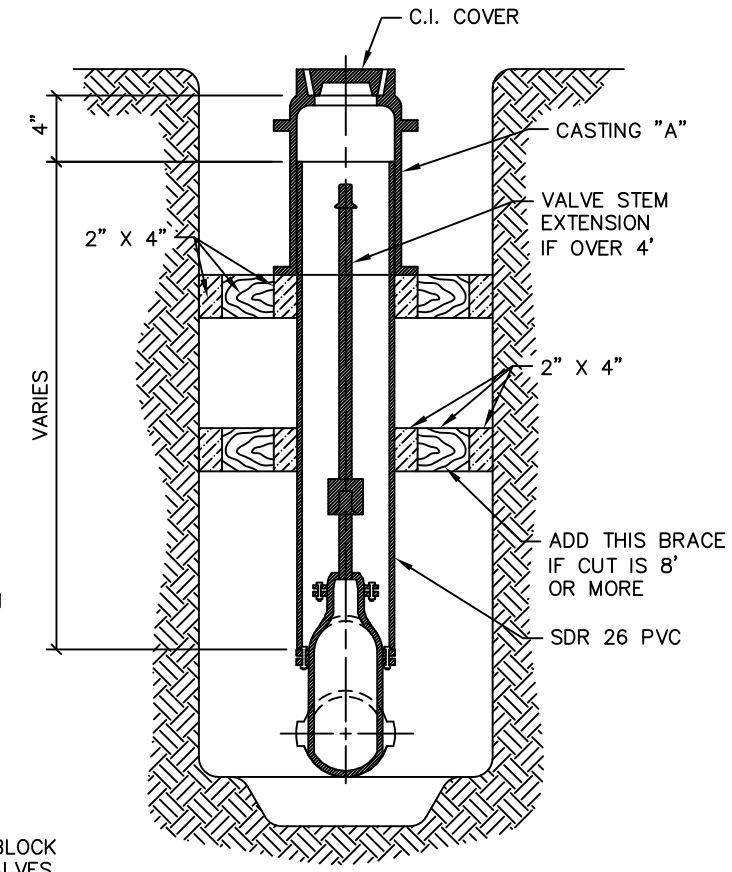

SECTION C–C

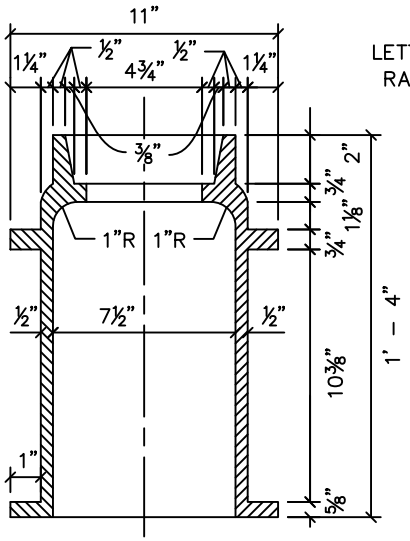

SECTION THRU CASTING "A"

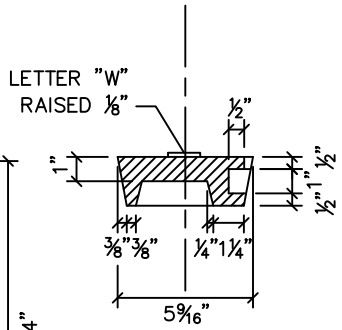

SECTION A–A

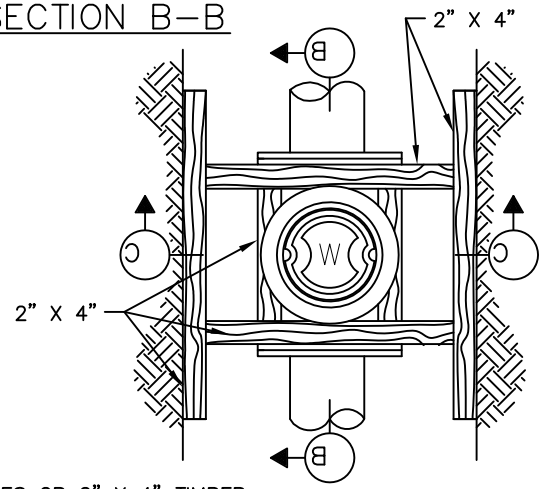

BRACES OR 2" X 4" TIMBER SECURELY NAILED

PLAN

NOT TO SCALE

CITY OF TOMBALL
ENGINEERING & PLANNING DEPARTMENT

VALVE BOX DETAIL

APPROVED BY COT:

ENGINEERING & PLANNING DEPARTMENT
EFFECTIVE JULY 1, 2010

SHEET 001 OF 001 | DWG NO: COT WA–12

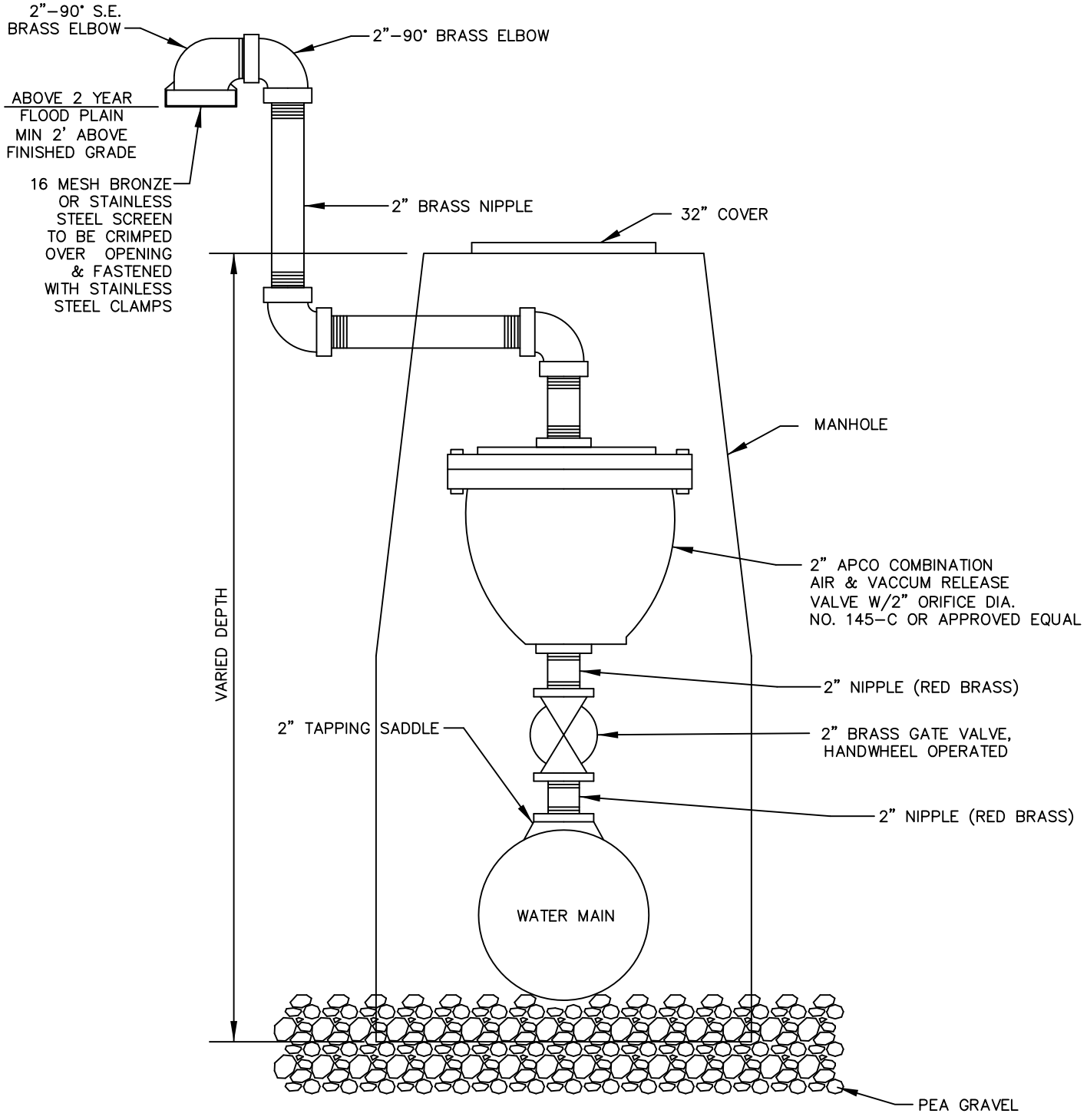

AIR RELEASE VALVE DETAIL

NOT TO SCALE

CITY OF TOMBALL
ENGINEERING & PLANNING DEPARTMENT

WATER LINE
AIR RELEASE VALVE BOX
CONSTRUCTION DETAILS

APPROVED BY COT:

ENGINEERING & PLANNING DEPARTMENT
EFFECTIVE JULY 1, 2010

SHEET 001 OF 001 | DWG NO: COT WA–13

CAD FILE PATH:

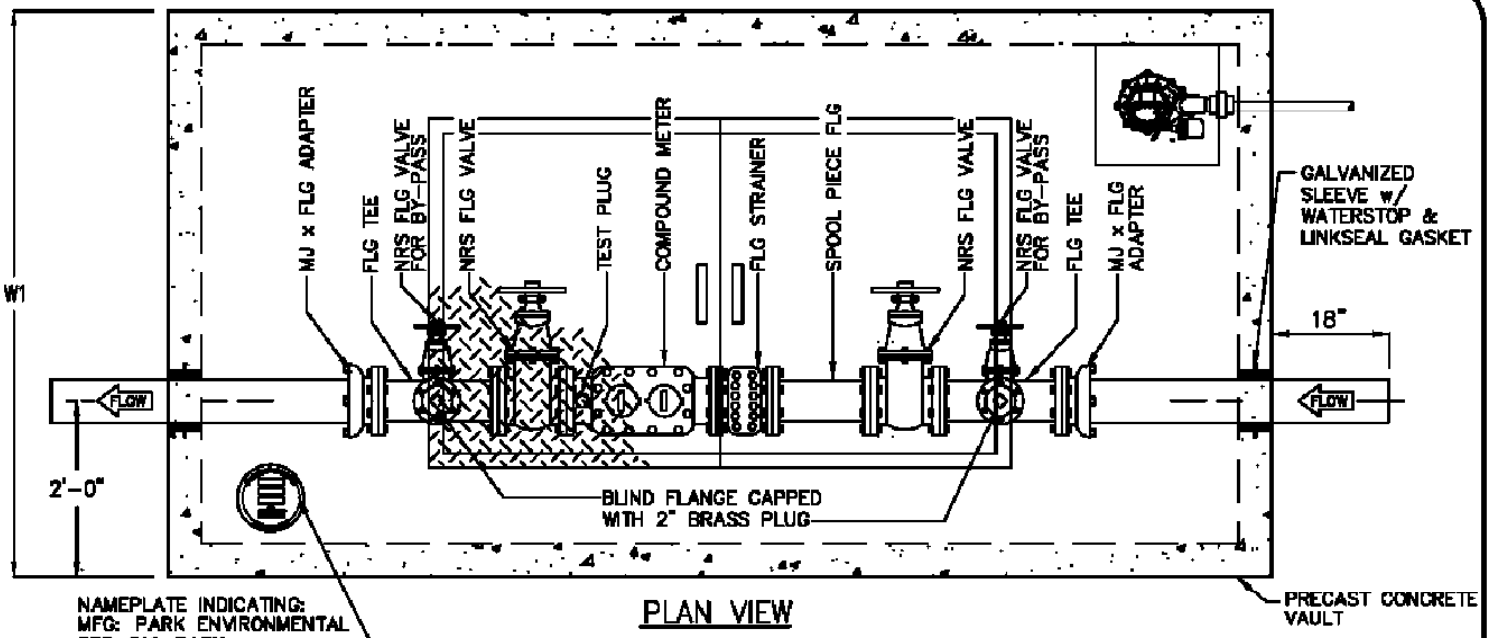

PLAN VIEW

NAMEPLATE INDICATING:
MFG: PARK ENVIRONMENTAL
888-611-PARK
WWW.PARK-USA.COM
MODEL: DMCCOT
DATE MANUFACTURED

MODEL	SIZE	BY PASS	HATCHWAY SIZE	L1	W1	H1	WEIGHT LBS
DMCCOT3	3"	2"	36"x60"	8'-8"	5'-0"	4'-0"	14,500
DMCCOT4	4"	2"	36"x60"	8'-8"	5'-0"	4'-0"	15,000
DMCCOT6	6"	4"	48"x72"	11'-0"	6'-0"	4'-3"	15,500

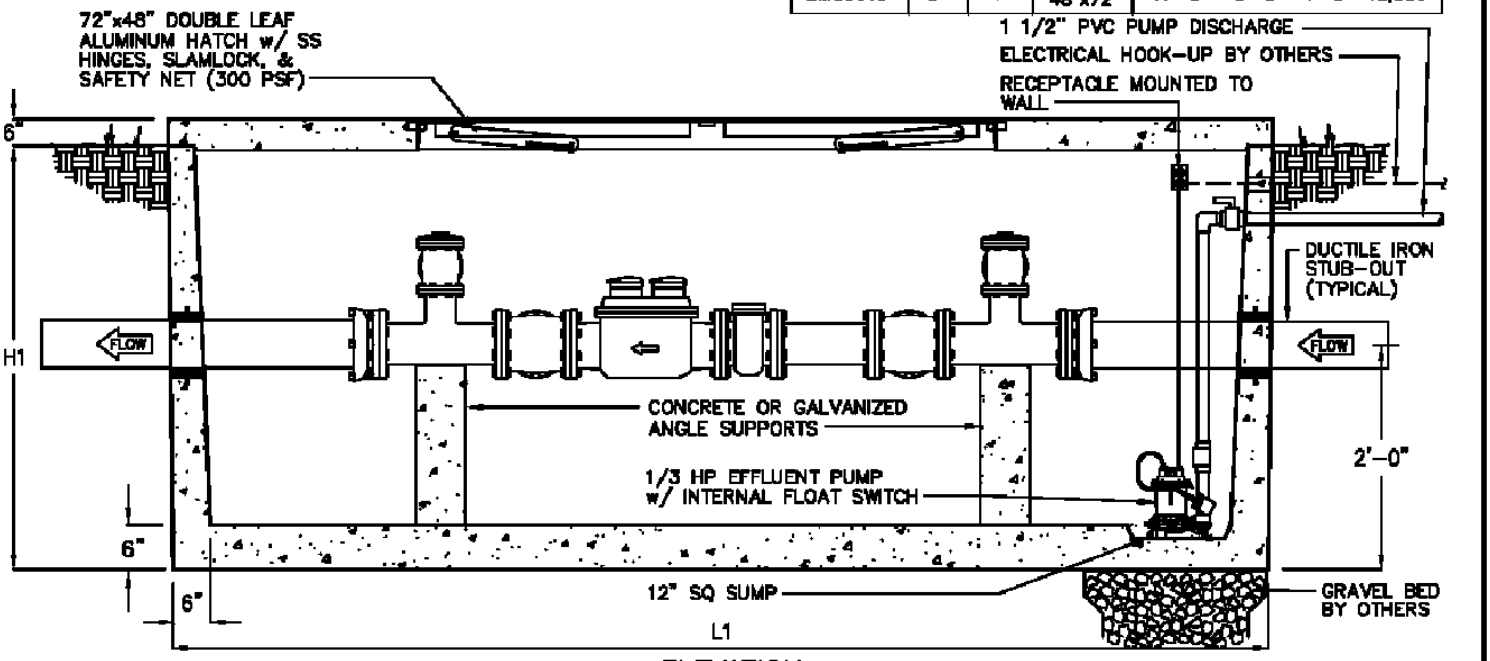

ELEVATION

© Park 2010

Specifications

CONCRETE : Class II concrete with design strength of 5000 PSI at 28 days. Unit is of monolithic construction at floor and first stage of wall with sectional riser to required depth.

REINFORCEMENT: Grade 60 reinforced. Steel rebar conforming to ASTM A615 on required centers or equal.

HATCHWAY: 1/4" Aluminum diamond plate cover with extruded aluminum frame. Hatch to be furnished with 316 stainless steel snap lock & brass hinges.

Engineering Data

Field excavation and preparation shall be completed prior to delivery of assembly. Use dimensional data as shown. Pipe, valves and fittings of the assembly are approved by one or more of the following associations:

FM AWWA UL UPC NPCA CERTIFIED PLANT

PROJECT :

CUSTOMER :

ORDER # :

DATE :

PARK EQUIPMENT COMPANY

WWW.PARK-USA.COM

CITY OF TOMBALL, TEXAS

DOMESTIC WATER COMPOUND METER ASSEMBLY MODEL DMCCOT w/ CONCRETE LID

SCALE	NONE	DWG. NO.	REV.
DATE	03/10	DMCCOT	A

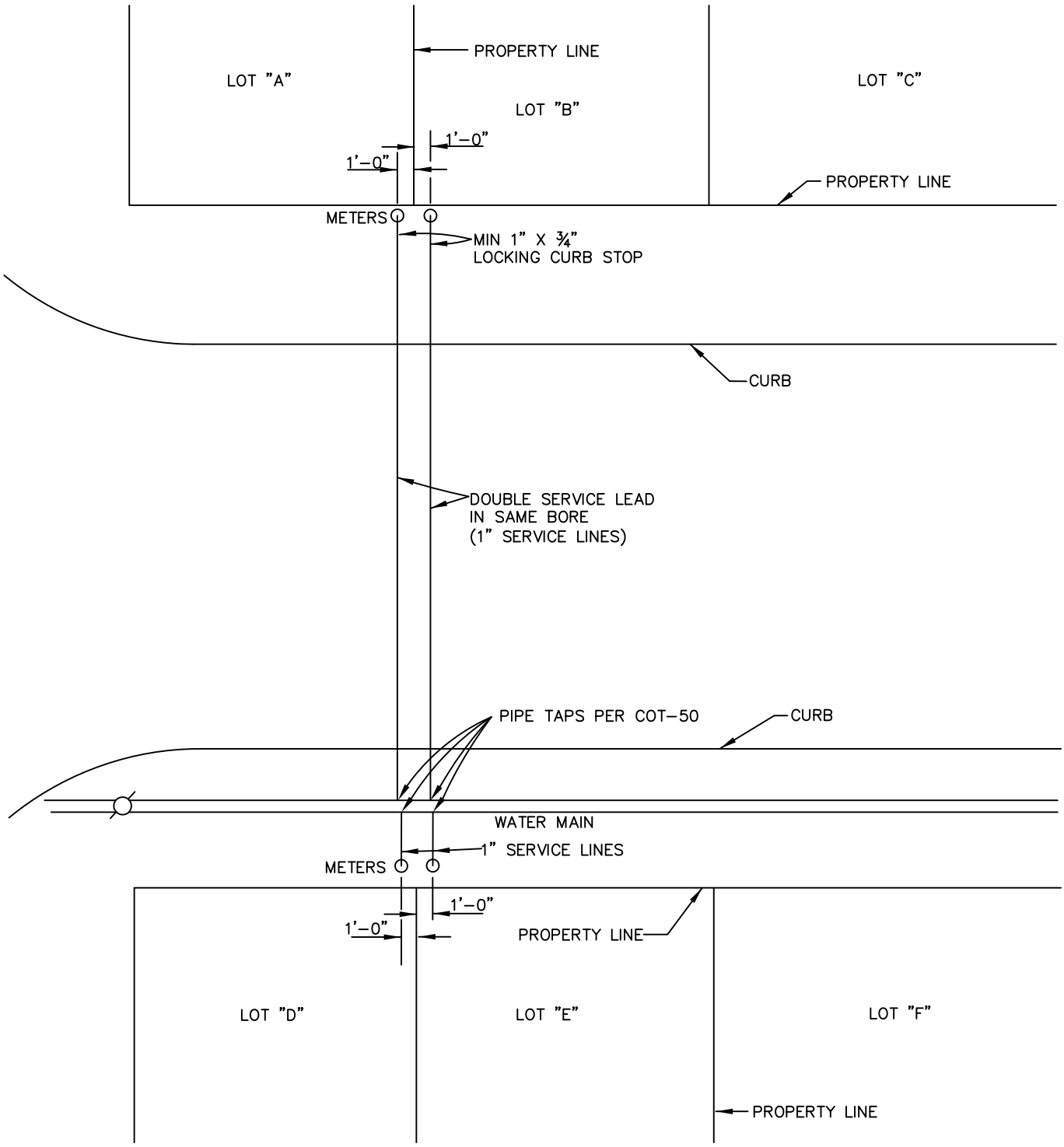

NOT TO SCALE

CITY OF TOMBALL
ENGINEERING & PLANNING DEPARTMENT

TYPICAL 1" THROUGH 2" SERVICE ARRANGEMENTS CONSTRUCTION DETAILS

APPROVED BY COT:

ENGINEERING & PLANNING DEPARTMENT
EFFECTIVE JULY 1, 2010

SHEET 001 OF 001 | DWG NO: COT WA-15

NOTE:
1. TWO SERVICE LINES MAY BE INSTALLED IN SAME TRENCH PROVIDING 4" CLEARANCE IS MAINTAINED

CAD FILE PATH:

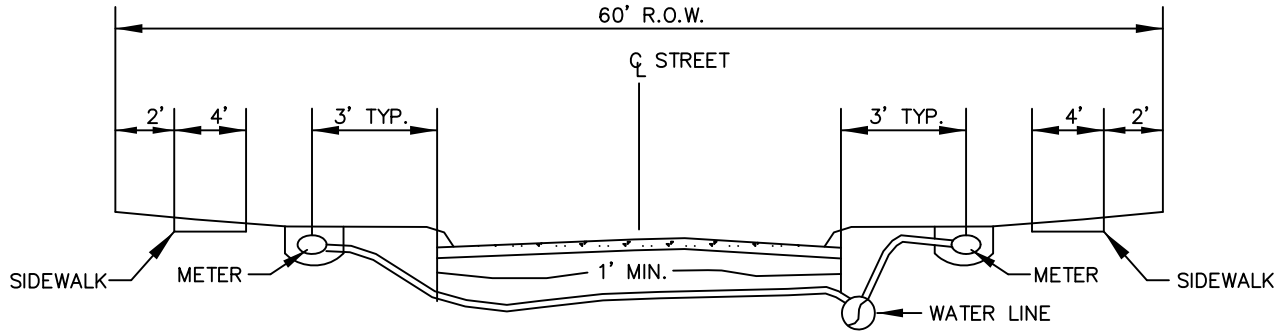

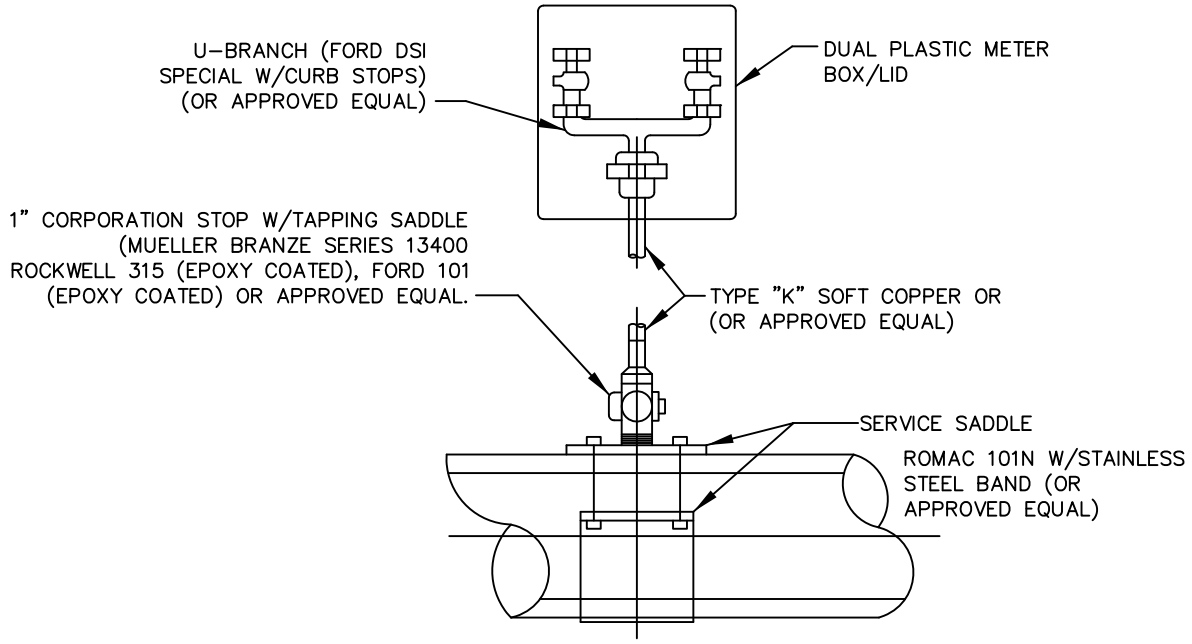

NOTE:

USE COPPER OR APPROVED TUBING OF 1" MINIMUM SIZE FOR SINGLE AND DOUBLE LEADS TO METER.

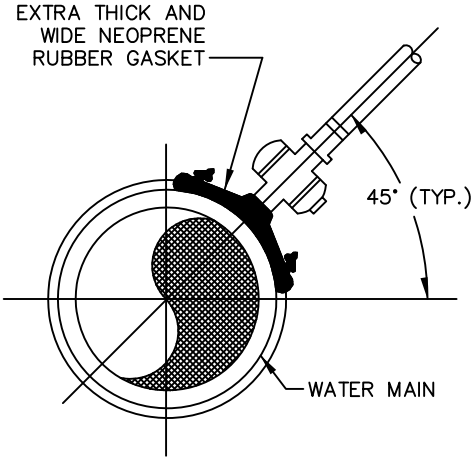

WATER SERVICE CONNECTION (DOUBLE SERVICE)*
AND
WATER SERVICE TAPPING ASSEMBLY DETAIL

* WHEN DEMAND IS NOT EXPECTED TO EXCEED 3/4" SERVICE (AS REVIEWED AND APPROVED BY ENGINEERING & PLANNING DEPARTMENT)

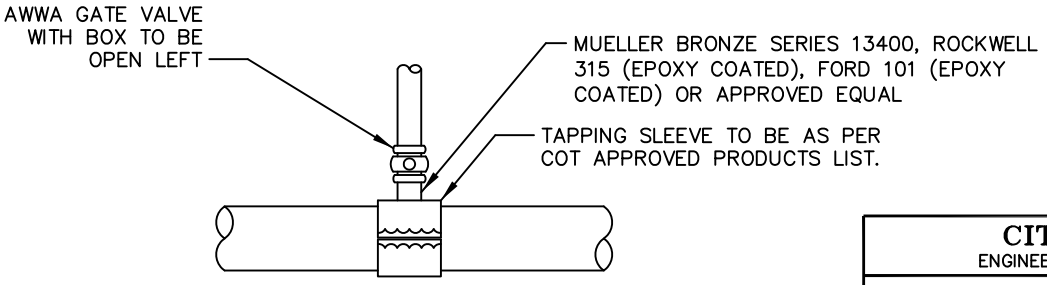

TOP VIEW

TAPPING SLEEVE & VALVE DETAIL

NOTES:
THE MAXIMUM ALLOWABLE SIZE OF A TAPPING SLEEVE AND VALVE ON AN EXISTING PIPE IS ONE SIZE SMALLER THEN THE PIPE DIAMETER OF THE MAIN TO BE TAPPED.

NOT TO SCALE

CITY OF TOMBALL
ENGINEERING & PLANNING DEPARTMENT

WATER LINE SERVICE CONNECTION CONSTRUCTION DETAILS

APPROVED BY COT:

ENGINEERING & PLANNING DEPARTMENT
EFFECTIVE JULY 1, 2010

SHEET 001 OF 001 | DWG NO: COT WA-16

CAD FILE PATH:

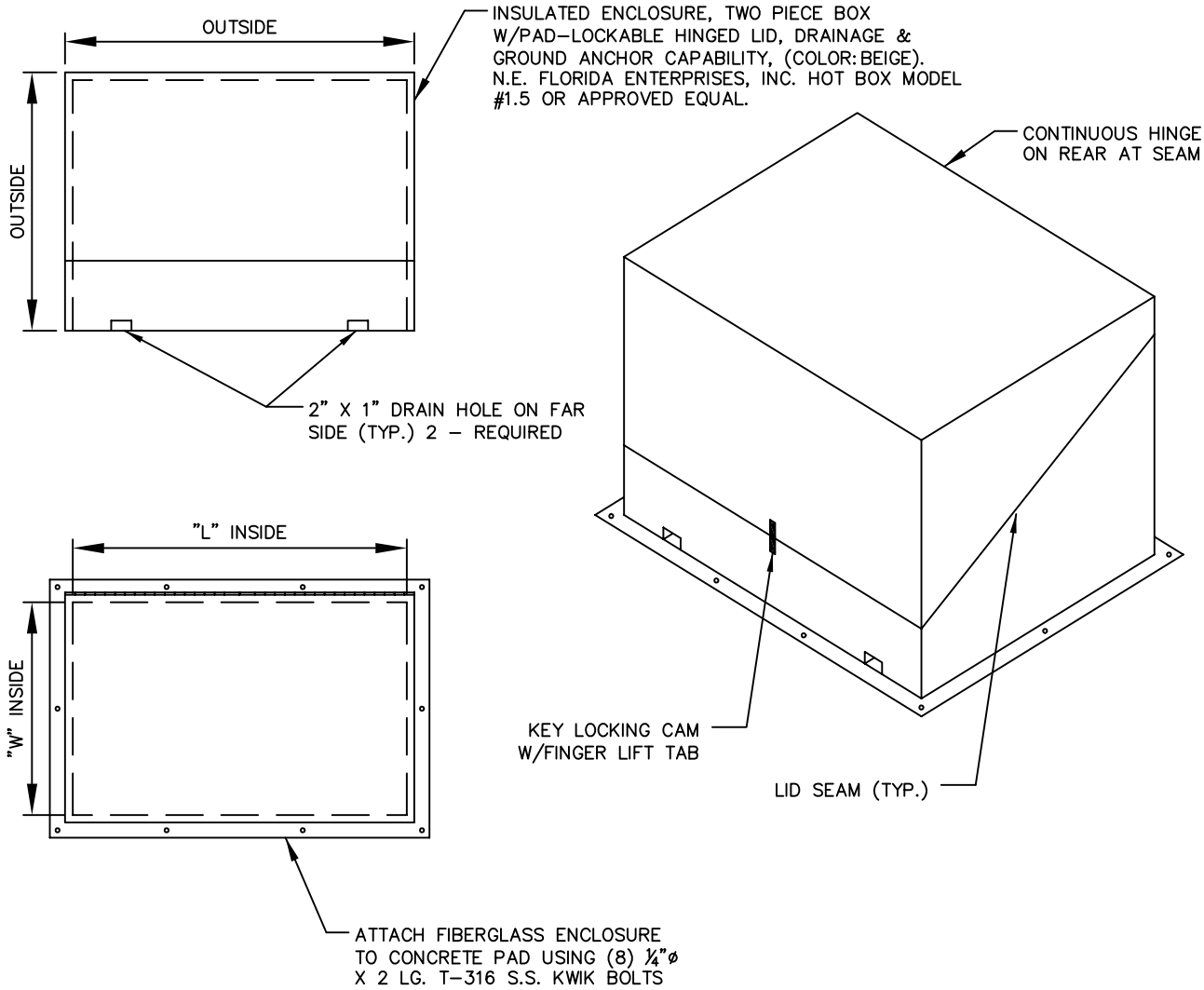

DETAIL OF BACKFLOW PREVENTOR ENCLOSURE

MODEL #	PIPE SIZE	INSIDE L	INSIDE W	INSIDE H	WEIGHT	PAD SIZE
LB1.5	3/4"–1 1/2"	33"	21"	24"	65#	44"X32"
LB2	1 1/4"–2"	39"	13"	28"	75#	50"X24"

NOT TO SCALE

CITY OF TOMBALL
ENGINEERING & PLANNING DEPARTMENT

HOT BOX ENCLOSURES DETAIL

APPROVED BY COT:

ENGINEERING & PLANNING DEPARTMENT
EFFECTIVE JULY 1, 2010

SHEET 001 OF 001 | DWG NO: COT WA–17

CAD FILE PATH: