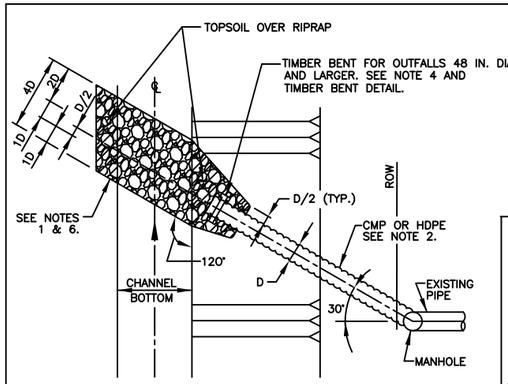

PLAN

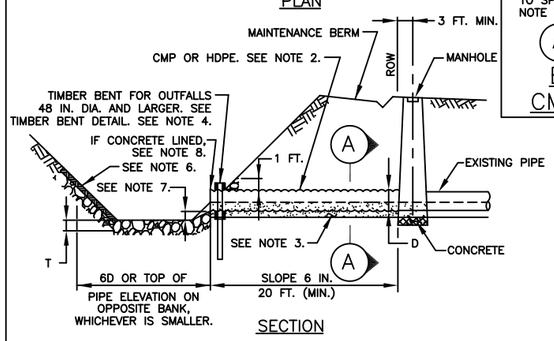

SECTION

TYPICAL STORM SEWER OUTFALL STRUCTURE LAYOUT

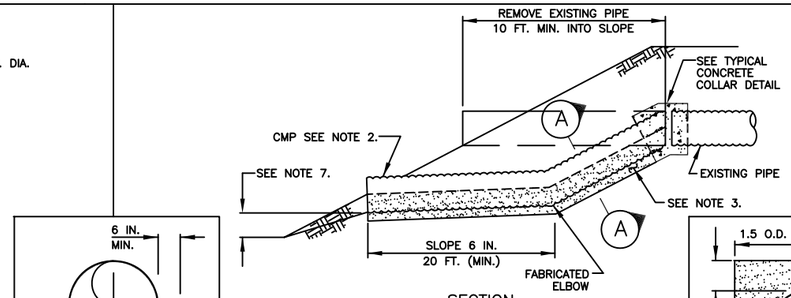

SECTION

PIPE ADJUSTMENT DETAIL 24–INCH TO 42–INCH DIAMETER

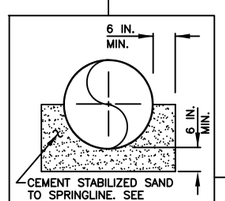

A SECTION

BEDDING CMP DETAIL

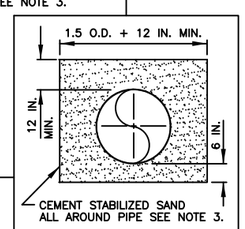

A SECTION

BEDDING HDPE PIPE DETAIL

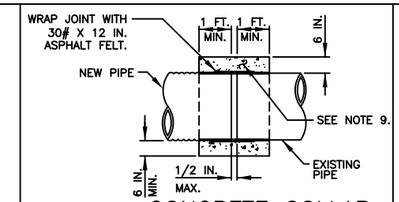

CONCRETE COLLAR DETAIL

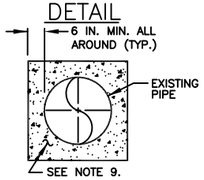

BEDDING CONCRETE PIPE DETAIL

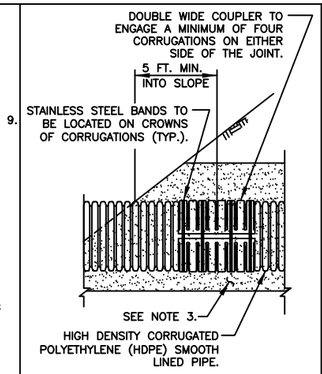

HDPE PIPE BAND COUPLER DETAIL

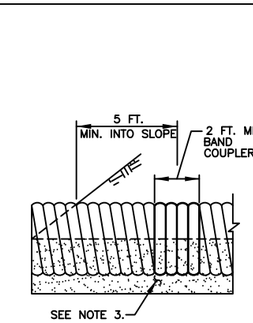

CMP BAND COUPLER DETAIL

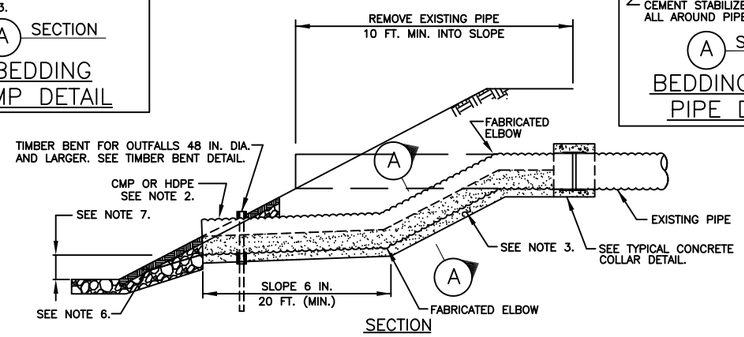

SECTION

PIPE ADJUSTMENT DETAIL 48–INCH AND LARGER DIAMETER

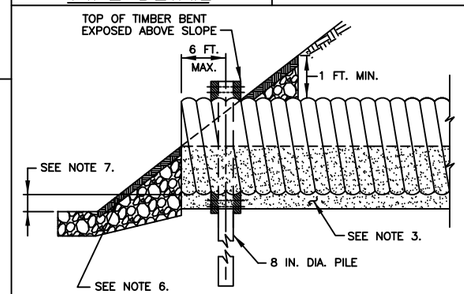

TYPICAL SECTION

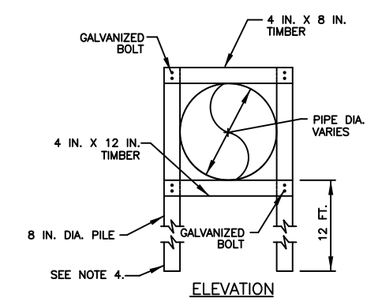

ELEVATION

TIMBER BENT DETAIL FOR 48–INCH AND LARGER OUTFALLS

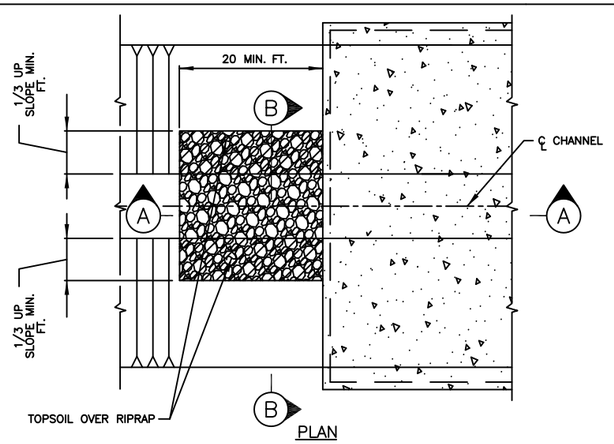

PLAN

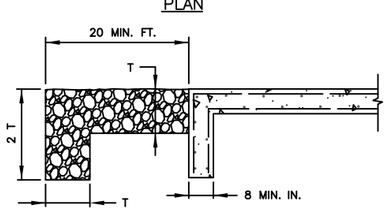

NOTE:
TOE–IN RIPRAP ACROSS CHANNEL BOTTOM & UP SLOPE. DO NOT PLACE TOE AGAINST CONCRETE.

A SECTION

NOTE:
T (MAT THICKNESS)
18 MIN. IN. GRADE 1

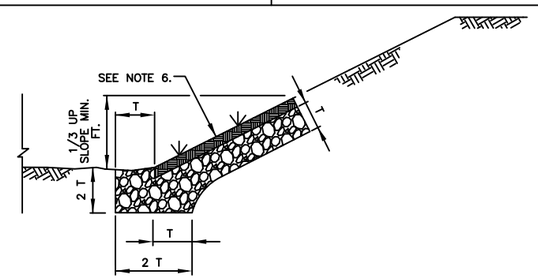

TYPICAL RIPRAP LINING DETAIL–SIDE SLOPE ONLY

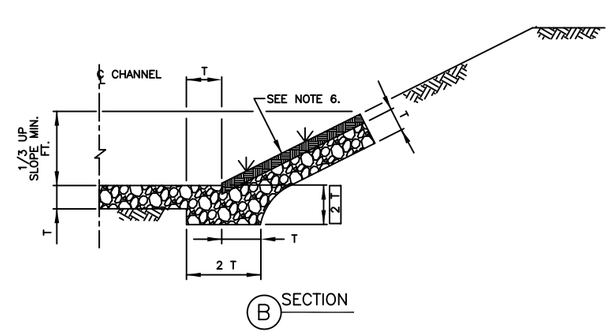

B SECTION

TYPICAL RIPRAP AT CONCRETE CHANNEL LINING

STORM SEWER OUTFALL NOTES:

1. INSTALL OUTFALLS 48 INCHES OR LARGER, AND STORM SEWER AND TREATMENT PLANT OUTFALLS OF ANY DIAMETER, WITH RIPRAP EROSION DIMENSIONED AS SHOWN IN "TYPICAL STORM SEWER OUTFALL STRUCTURE LAYOUT."
2. STORM SEWER OUTFALL PIPES WITHIN THE HCFCD RIGHT–OF–WAY SHALL BE CMP OR HDPE IN ACCORDANCE WITH SPECIFICATION SECTION 02642–CORRUGATED METAL PIPE, HIGH DENSITY POLYETHYLENE PIPE (HDPE) IN ACCORDANCE WITH SPECIFICATION SECTION 02505–HIGH DENSITY POLYETHYLENE PIPE, OR APPROVED EQUAL.
3. PROVIDE AND PLACE CEMENT STABILIZED SAND IN ACCORDANCE WITH SPECIFICATION SECTION NO. 02321–CEMENT STABILIZED SAND.
4. TIMBER BENTS SHALL BE IN ACCORDANCE WITH SPECIFICATION SECTION 02464–TIMBER BENTS.
5. STORM SEWER OUTFALLS SHALL BE IN ACCORDANCE WITH SPECIFICATION SECTION 02316–STRUCTURAL EXCAVATING AND BACKFILLING.
6. RIPRAP SHALL BE PLACED IN ACCORDANCE WITH SPECIFICATION SECTION 02378–RIPRAP AND GRANULAR FILL. FILL RIPRAP VOIDS AND BURY RIPRAP A MINIMUM OF 6 INCHES WITH TOPSOIL ON SIDE SLOPE AS DIRECTED BY THE ENGINEER.
7. SET FLOWLINE OF OUTFALLS 1 FOOT ABOVE CHANNEL FLOWLINE OR 1 FOOT ABOVE NORMAL WATER SURFACE ELEVATION.
8. SEE CONCRETE CHANNEL LINING DETAIL SHEET FOR CMP OR HDPE OUTFALL DETAILS THROUGH CONCRETE CHANNEL LINING.
9. STRUCTURAL CONCRETE #4 BARS (GRADE 40) 12 INCH O.C. EACH WAY – FOR COLLARS ONLY.

THIS DETAIL SHEET HAS BEEN PREPARED FOR USE ON HCFCD PROJECTS OR PROJECTS TO BE MAINTAINED BY THE HCFCD WHEN COMPLETED BY OTHERS. AN ENGINEER WHO INCORPORATES THE DETAILS ON THIS SHEET BECOMES RESPONSIBLE FOR ITS USE IN THE END PRODUCT IN ACCORDANCE WITH RULE §137.33 (b) AND (c) OF THE TEXAS STATE BOARD OF REGISTRATION FOR PROFESSIONAL ENGINEERS.

P.E. SEAL AND SIGNATURE

REV	DESCRIPTION	DATE	APPR

PROJECT ID#

PROJECT TITLE

STORM SEWER AND RIPRAP DETAILS

PREPARED:

CHECKED:

APPROVED:

COMPANY INFORMATION AND LOGO GOES HERE

Harris County Flood Control District
9900 Northwest Freeway
Houston, Texas 77092

DATE: 08–31–05
SCALE: NTS

SHEET NUMBER
— OF —

STD\STORM SEWER OUTFALL DETAILS

COT STM–33