TABLE OF VARIABLE DIMENSIONS AND QUANTITIES FOR ONE HEADWALL (4)

SLOPE	DIA OF PIPE, D	Values for one Pipe						Values to be added for each addt'l Pipe		
		W	X	Y	L	Reinf (Lbs)	Conc (CY) (1)	X and W	Reinf (Lbs)	Conc (CY) (1)
2:1	12"	4'- 9"	3'- 1 1/2"	2'-10"	4'- 0"	90	0.6	2'- 0 1/4"	22	0.2
	15"	5'- 6 3/4"	3'- 5 1/4"	3'- 4"	4'- 8 1/2"	102	0.8	2'- 6"	28	0.3
	18"	6'- 4 3/4"	3'- 9 1/4"	3'-10"	5'- 5"	129	0.9	3'- 1"	41	0.4
	21"	7'- 2 3/4"	4'- 1 1/4"	4'- 4"	6'- 1 1/2"	144	1.1	3'- 6 3/4"	47	0.5
	24"	8'- 2 1/2"	4'- 7"	4'-10"	6'-10"	164	1.4	4'- 1 3/4"	57	0.6
	27"	9'- 0 1/2"	4'-11"	5'- 4"	7'- 6 1/2"	178	1.6	4'- 6 1/4"	62	0.7
	30"	9'-10 1/2"	5'- 3"	5'-10"	8'- 3"	212	1.8	5'- 0"	72	0.9
	33"	10'- 8 3/4"	5'- 7"	6'- 4"	8'-11 1/2"	225	2.1	5'- 4 3/4"	79	1.0
	36"	11'- 6 3/4"	5'-11 1/4"	6'-10"	9'- 8"	250	2.4	5'-10 1/2"	90	1.2
	42"	13'- 2 3/4"	6'- 7 1/4"	7'-10"	11'- 1"	304	3.0	6'- 8 3/4"	109	1.5
	48"	15'- 4 3/4"	7'- 3 1/4"	9'- 4"	13'- 2 1/2"	369	4.0	7'- 7 1/4"	142	2.0
	54"	17'- 1"	7'-11 1/2"	10'- 4"	14'- 7 1/4"	429	4.7	8'- 8"	170	2.5
	60"	18'- 9"	8'- 7 1/2"	11'- 4"	16'- 0 1/4"	484	5.6	9'- 6 1/4"	194	2.9
	66"	20'- 5"	9'- 3 1/2"	12'- 4"	17'- 5 1/4"	550	6.5	10'- 1 1/4"	217	3.3
	72"	22'- 1 1/4"	9'-11 3/4"	13'- 4"	18'-10 1/4"	614	7.5	10'- 9 1/4"	239	3.7
3:1	12"	6'- 2"	3'- 1 1/2"	4'- 3"	6'- 0"	118	0.9	2'- 0 1/4"	24	0.3
	15"	7'- 2 3/4"	3'- 5 1/4"	5'- 0"	7'- 0 3/4"	142	1.1	2'- 6"	31	0.4
	18"	8'- 3 3/4"	3'- 9 1/4"	5'- 9"	8'- 1 1/2"	179	1.4	3'- 1"	46	0.5
	21"	9'- 4 3/4"	4'- 1 1/4"	6'- 6"	9'- 2 1/4"	197	1.7	3'- 6 3/4"	53	0.7
	24"	10'- 7 1/2"	4'- 7"	7'- 3"	10'- 3"	227	2.1	4'- 1 3/4"	65	0.8
	27"	11'- 8 1/2"	4'-11"	8'- 0"	11'- 3 3/4"	255	2.4	4'- 6 1/4"	75	1.0
	30"	12'- 9 1/2"	5'- 3"	8'- 9"	12'- 4 1/2"	298	2.8	5'- 0"	86	1.2
	33"	13'-10 3/4"	5'- 7"	9'- 6"	13'- 5 1/4"	322	3.2	5'- 4 3/4"	94	1.3
	36"	14'-11 3/4"	5'-11 1/4"	10'- 3"	14'- 6"	355	3.7	5'-10 1/2"	108	1.5
	42"	17'- 1 3/4"	6'- 7 1/4"	11'- 9"	16'- 7 1/2"	441	4.6	6'- 8 3/4"	133	2.0
	48"	20'- 0 3/4"	7'- 3 1/4"	14'- 0"	19'- 9 1/2"	542	6.2	7'- 7 1/4"	176	2.7
	54"	22'- 3"	7'-11 1/2"	15'- 6"	21'-11"	626	7.5	8'- 8"	211	3.3
	60"	24'- 5"	8'- 7 1/2"	17'- 0"	24'- 0 1/2"	725	8.9	9'- 6 1/4"	246	3.9
	66"	26'- 7"	9'- 3 1/2"	18'- 6"	26'- 2"	821	10.4	10'- 1 1/4"	274	4.5
	72"	28'- 9 1/4"	9'-11 3/4"	20'- 0"	28'- 3 1/2"	930	12.0	10'- 9 1/4"	309	5.1
4:1	12"	7'- 7"	3'- 1 1/2"	5'- 8"	8'- 0 1/4"	156	1.2	2'- 0 1/4"	28	0.3
	15"	8'-10 3/4"	3'- 5 1/4"	6'- 8"	9'- 5 1/4"	183	1.5	2'- 6"	36	0.5
	18"	10'- 2 3/4"	3'- 9 1/4"	7'- 8"	10'-10"	228	1.9	3'- 1"	52	0.6
	21"	11'- 6 3/4"	4'- 1 1/4"	8'- 8"	12'- 3"	264	2.3	3'- 6 3/4"	63	0.8
	24"	13'- 0 1/2"	4'- 7"	9'- 8"	13'- 8"	301	2.8	4'- 1 3/4"	75	1.0
	27"	14'- 4 1/2"	4'-11"	10'- 8"	15'- 1"	339	3.4	4'- 6 1/4"	87	1.2
	30"	15'- 8 1/2"	5'- 3"	11'- 8"	16'- 6"	394	3.9	5'- 0"	99	1.4
	33"	17'- 0 3/4"	5'- 7"	12'- 8"	17'-11"	432	4.5	5'- 4 3/4"	112	1.7
	36"	18'- 4 3/4"	5'-11 1/4"	13'- 8"	19'- 4"	479	5.2	5'-10 1/2"	128	1.9
	42"	21'- 0 3/4"	6'- 7 1/4"	15'- 8"	22'- 1 3/4"	587	6.6	6'- 8 3/4"	158	2.5
	48"	24'- 8 3/4"	7'- 3 1/4"	18'- 8"	26'- 4 3/4"	738	8.9	7'- 7 1/4"	211	3.3
	54"	27'- 5"	7'-11 1/2"	20'- 8"	29'- 2 3/4"	871	10.8	8'- 8"	257	4.1
	60"	30'- 1"	8'- 7 1/2"	22'- 8"	32'- 0 3/4"	999	12.8	9'- 6 1/4"	297	4.9
	66"	32'- 9"	9'- 3 1/2"	24'- 8"	34'-10 1/2"	1139	14.9	10'- 1 1/4"	340	5.6
	72"	35'- 5 1/4"	9'-11 3/4"	26'- 8"	37'- 8 1/2"	1290	17.3	10'- 9 1/4"	378	6.4
6:1	12"	10'- 5"	3'- 1 1/2"	8'- 6"	12'- 0 1/4"	223	1.9	2'- 0 1/4"	32	0.4
	15"	12'- 2 3/4"	3'- 5 1/4"	10'- 0"	14'- 1 3/4"	273	2.5	2'- 6"	43	0.6
	18"	14'- 0 3/4"	3'- 9 1/4"	11'- 6"	16'- 3 1/4"	336	3.2	3'- 1"	61	0.8
	21"	15'-10 3/4"	4'- 1 1/4"	13'- 0"	18'- 4 1/2"	396	3.9	3'- 6 3/4"	76	1.1
	24"	17'-10 1/2"	4'- 7"	14'- 6"	20'- 6"	450	4.8	4'- 1 3/4"	91	1.4
	27"	19'- 8 1/2"	4'-11"	16'- 0"	22'- 7 1/2"	519	5.7	4'- 6 1/4"	108	1.6
	30"	21'- 6 1/2"	5'- 3"	17'- 6"	24'- 9"	595	6.6	5'- 0"	124	2.0
	33"	23'- 4 3/4"	5'- 7"	19'- 0"	26'-10 1/2"	674	7.7	5'- 4 3/4"	143	2.3
	36"	25'- 2 3/4"	5'-11 1/4"	20'- 6"	29'- 0"	737	8.8	5'-10 1/2"	162	2.7
	42"	28'-10 3/4"	6'- 7 1/4"	23'- 6"	33'- 2 3/4"	920	11.3	6'- 8 3/4"	202	3.5
	48"	34'- 0 3/4"	7'- 3 1/4"	28'- 0"	39'- 7 1/4"	1189	15.5	7'- 7 1/4"	274	4.6

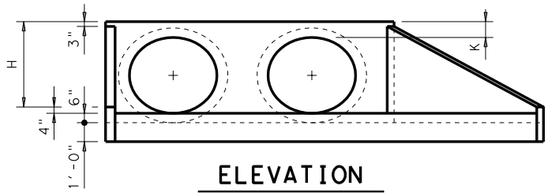

ELEVATION

Showing dimensions

1. Quantities shown are for concrete pipe and will increase slightly for metal pipe installations.
2. For vehicle safety, curbs shall project no more than 3" above finished grade. Curb heights shall be reduced, if necessary, to meet these requirements. No changes will be made in quantities and no additional compensation will be allowed for this work.
3. Provide a 1'-0" footing as shown where required to maintain 4" Min cover for pipes.
4. Quantities shown are for one structure end only (one headwall).
5. Min Length = 6" + 3" x $\left(\frac{12 \times H - 7}{12 \times L}\right)$

   Max Length = 12 x H - 3" x $\left(\frac{12 \times H - 7}{12 \times L}\right)$ - 1"
6. Lengths of wings based on SL:1 Slope along this line.

TABLE OF REINFORCING STEEL (4)

Bar	Size	Spa	No.
A	# 4	1'-0"	~
B	# 3	1'-6"	~
CL	# 4	1'-0"	~
CS	# 4	1'-0"	~
D	# 3	1'-0"	~
E	# 5	~	4
F	# 5	~	~
G	# 3	~	2
SL	# 4	~	3
SS	# 4	~	3
V	# 4	1'-0"	~
WL	# 5	~	2
WS	# 5	~	2

TABLE OF CONSTANT DIMENSIONS

DIA OF PIPE, D	G	K	H
12"	9"	1'- 0"	2'- 0"
15"	11"	1'- 0"	2'- 3"
18"	1'- 2"	1'- 0"	2'- 6"
21"	1'- 4"	1'- 0"	2'- 9"
24"	1'- 7"	1'- 0"	3'- 0"
27"	1'- 8"	1'- 0"	3'- 3"
30"	1'-10"	1'- 0"	3'- 6"
33"	1'-11"	1'- 0"	3'- 9"
36"	2'- 1"	1'- 0"	4'- 0"
42"	2'- 4"	1'- 0"	4'- 6"
48"	2'- 7"	1'- 3"	5'- 3"
54"	3'- 0"	1'- 3"	5'- 9"
60"	3'- 3"	1'- 3"	6'- 3"
66"	3'- 3"	1'- 3"	6'- 9"
72"	3'- 4"	1'- 3"	7'- 3"

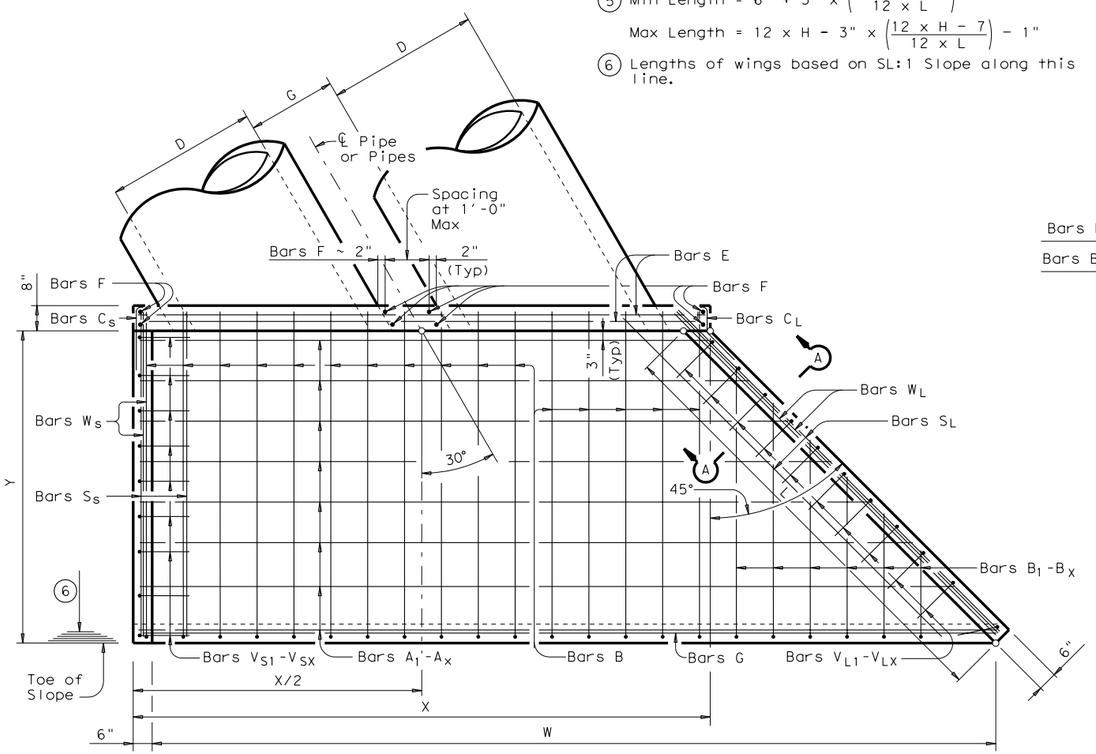

PLAN

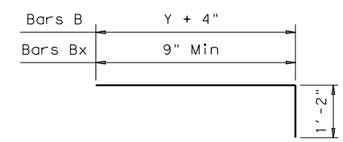

BARS B & B_1-B_X

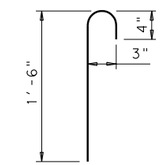

BARS C_S
(2'-0" long)

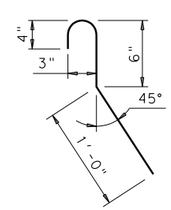

BARS C_L
(2'-0" long)

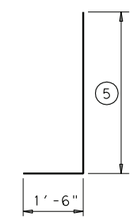

BARS V_S & V_L

GENERAL NOTES:

Designed according to AASHTO LRFD Specifications.

Reinforcing steel shall be placed with the center of the outside layer of bars 2" from the surface of the concrete.

All reinforcing steel shall be Grade 60.

All concrete shall be Class "C" and shall have a minimum compressive strength of 3600 psi.

No bridge rails of any type may be mounted directly to these culvert headwalls.

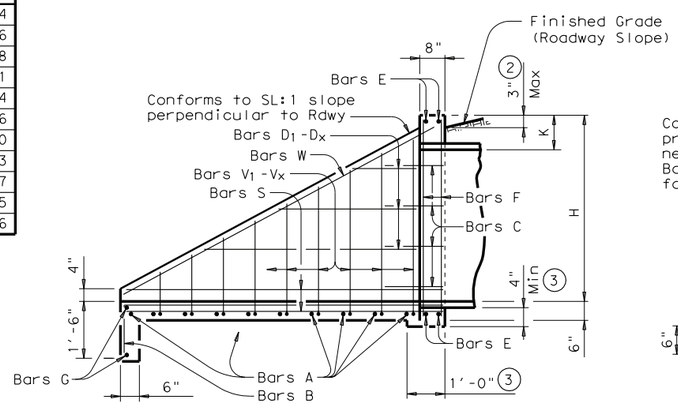

TYPICAL WING ELEVATION

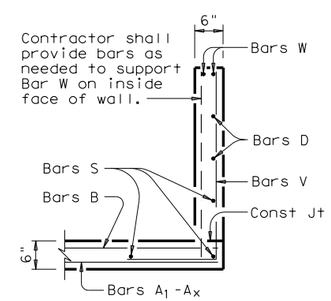

SECTION A-A

Texas Department of Transportation
Bridge Division

CONCRETE HEADWALLS WITH FLARED WINGS FOR 30° SKEW PIPE CULVERTS

CH-FW-30

FILE: chfw30se.dgn	DN: TxDOT	CK: TxDOT	DW: TxDOT	CK: GAF
© TxDOT February 2010	DISTRICT	FEDERAL AID PROJECT		SHEET
REVISIONS	COUNTY	CONTROL	SECT	JOB	HIGHWAY

DISCLAIMER:
The use of this standard is governed by the "Texas Engineering Practice Act". No warranty of any kind is made by TxDOT for any purpose whatsoever. TxDOT assumes no responsibility for the conversion of this standard to other formats or for incorrect results or damages resulting from its use.

ACC:

LEVELS DISPLAYED