STORM SEWER NOTES

1. STORM SEWER CONSTRUCTION SHALL CONFORM TO THE CITY OF TOMBALL SPECIFICATIONS FOR STORM SEWER CONSTRUCTION.

2. ALL STORM SEWER TO BE ASTM C–76, CLASS III REINFORCED CONCRETE PIPE WITH RUBBER GASKETED JOINTS CONFORMING TO ASTM C443. CLASS IV RCP REQUIRED UNDER PAVEMENT WITH LESS THEN 2' OF COVER.

3. ALL STORM SEWER INLETS SHALL BE BACKFILLED WITH CEMENT STABILIZED SAND (1.5 SACKS PER TON). ALL BEDDING SHALL BE CLASS "AA". ALL STORM SEWERS TO BE INSPECTED BY CITY PRIOR TO BACKFILL.

4. ALL STORM SEWER TRENCHES UNDER PROPOSED AND FUTURE PAVEMENT OR WITHIN ONE FOOT (1') FROM BACK OF CURB TO BE BACKFILLED WITH CEMENT STABILIZED SAND (1.5 SACKS PER TON) TO A POINT OF ONE FOOT (1') BELOW PAVEMENT SUBGRADE. THE REMAINING BACKFILL TO BE MADE WITH COMPACTED SELECT MATERIAL. COST OF BACKFILL AND BEDDING TO BE INCLUDED IN UNIT PRICE PER LINEAR FOOT OF PIPE.

5. HIGH DENSITY POLYETHYLENE PIPE MAY BE SUBSTITUTED ON PRIVATE PROPERTY FOR REINFORCED CONCRETE PIPE SUBJECT TO THE FOLLOWING:

   a. FOR PIPES 36" AND SMALLER – CEMENT STABILIZED SAND PLACED BEFORE PIPE IS LAID, TO 7" MIN. BEDDING DEPTH. FOR SEWERS 42"–60" CEMENT STABILIZED SAND PLACED BEFORE PIPE IS LAID, TO 10" MIN. BEDDING DEPTH. THE SIDES SHALL BE 12" MIN. FROM EDGE OF TRENCH TO SPRINGLINE.

   b. CEMENT STABILIZED SAND SHALL BE THOROUGHLY RODDED, PLACED AND COMPACTED TO 95% STANDARD PROCTOR DENSITY 1'–0" ABOVE THE TOP OF PIPE, AFTER PIPE IS LAID.

   c. PIPE AND FITTINGS: THE TYPES OF PIPE WILL BE INDICATED ON THE DRAWINGS BY THE FOLLOWING DESCRIPTION CONFORMING TO AASHTO M 252, AASHTO M 294, AND/OR AASHTO MP6–95, LATEST EDITION. PIPE DESCRIPTION: CPP (CORRUGATED POLYETHYLENE PIPE).

   d. TYPE S (THIS PIPE SHALL HAVE A FULL CIRCULAR CROSS–SECTION, WITH AN OUTER CORRUGATED PIPE WALL AND A SMOOTH INNER LINE).

CITY OF TOMBALL
ENGINEERING & PLANNING DEPARTMENT

STORM SEWER NOTES

APPROVED BY COT:

ENGINEERING & PLANNING DEPARTMENT
EFFECTIVE JULY 1, 2010

SHEET 001 OF 001 | DWG NO: COT STM–01

CAD FILE PATH:

PRIVATE DRAINAGE AND DETENTION POND OPERATION AND MAINTENANCE REQUIREMENTS
CITY OF TOMBALL (MINIMUM REQUIREMENTS)

AS-BUILT REQUIREMENTS

1. PRIOR TO FACILITY OCCUPANCY, THE ENGINEER OF RECORD (EOR) WILL PROVIDE AS-BUILT DRAWINGS CERTIFYING THE POND SYSTEM DESIGN AND THE VOLUME PROVIDED IS IN ACCORDANCE TO THE APPROVED PLANS. THE OWNER OR THEIR DESIGNATED REPRESENTATIVE WILL BE RESPONSIBLE FOR PROVIDING SIGNAGE IDENTIFYING THE RESPONSIBLE CONTACT AND PHONE NUMBER FOR CONTINUED OPERATION AND MAINTENANCE OF THE POND IN ACCORDANCE TO THE APPROVED PLANS.

SITE INPSECTIONS AND REPORTING REQUIREMENTS

1. THE OWNER OR THEIR DESIGNATED REPRESENTATIVE WILL BE RESPONSIBLE FOR INSPECTING THE SITE TO ENSURE THAT ALL SYSTEMS ARE MAINTAINED AND ARE IN GOOD WORKING CONDITION. THE CITY WILL BE NOTIFIED AND KEPT INFORMED IN WRITING OF THE SITE REPRESENTATIVE, INCLUDING PHONE NUMBER AND ADDRESS. A STANDARD REPORTING FORM WILL BE DEVELOPED BY THE OWNER FOR CITY REVIEW AND APPROVAL. INSPECTION REPORTS WILL BE PROVIDED TO THE CITY ON A MINIMUM OF A QUARTERLY BASIS.

ROUTINE INSPECTIONS

1. ROUTINE INSPECTIONS WILL DICTATE MAINTENANCE REQUIREMENTS FOR GENERAL ITEMS AT THE SITE INCLUDING (IF APPLICABLE TO SITE), LOCKS, FENCING, SIGNAGE, AND ROAD/ACCESS CONDITIONS.
2. DEFECTIVE OR MISSING LOCKS WILL BE REPLACED AND WILL BE KEYED TO MATCH ALL OTHER SITE LOCKS.
3. MISSING OR DAMAGED CHAIN LINK FENCE WILL BE REPAIRED OR REPLACED AS NEEDED. FENCING REPAIR OR REPLACEMENT WILL BE IN ACCORDANCE WITH SPECIFICATIONS FROM THE ORIGINAL DESIGN PLANS.
4. DAMAGED OR MISSING SIGNS WILL BE REPLACED WITH A SIMILAR TYPE SIGNS.
5. ROADWAY SURFACES WHICH ARE DAMAGED WILL BE REPAIRED IN ACCORDANCE TO THE ORIGINAL PLAN SPECIFICATIONS.
6. SURFACE WATER DITCHES AND DETENTION PONDS WILL BE OBSERVED FOR EROSION OR SEDIMENT BUILD-UP, WHICH COULD RESULT IN OVERTOPPING AND SEVERE EROSION DOWN-SLOPE.

SPECIAL INPSECTIONS AFTER MAJOR HURRICANE OR TORNADO EVENTS

1. SPECIAL UNSCHEDULED INSPECTIONS WILL BE CONDUCTED AS NECESSARY AT THE SITE AFTER MAJOR HURRICANE OR TORNADO EVENTS. EVERY ATTEMPT WILL BE MADE TO HAVE THESE INSPECTIONS CONDUCTED WITHIN SEVERAL DAYS AFTER THE STORM EVENT TO ENSURE FENCING IS STILL IN PLACE AND MAJOR DAMAGE TO THE FACILITIES HAS NOT OCCURRED. ANY REPAIR WILL BE CONDUCTED AS SOON AS POSSIBLE.

MONTHLY MAINTENANCE

1. THE MAJORITY OF THE SITE WAS PLANTED WITH A TYPE OF (DEFINE NATIVE GRASS SEEDING). TYPICALLY, THESE AREAS WILL REQUIRE MOWING TWICE A MONTH FROM APRIL THROUGH OCTOBER, AND MONTHLY MOWING FROM NOVEMBER THROUGH MARCH.

ANNUAL MAINTENANCE

1. ANNUAL MAINTENANCE OF THE SITE MAY INCLUDE FERTILIZING AND RESEEDING THE SITE, AS NECESSARY.

SURFACE MAINTENANCE

1. INSPECTIONS PERFORMED, AS PART OF THE SCHEDULED ROUTINE INSPECTIONS AT THE SITE WILL DICTATE MAINTENANCE REQUIREMENTS FOR THE SITE. THE ITEMS TO BE ROUTINELY INSPECTED INCLUDE SURFACE WATER RUNOFF CONTROL, PONDED WATER, PRESENCE OF EROSION OR GULLYING, AND WHETHER OR NOT THE TOPSOIL AND VEGETATION ARE INTACT.
2. THE SITE WILL BE INSPECTED TO DETERMINE WHETHER IT DRAINS WITHOUT PONDING AND EROSION.
3. TOPSOIL WILL BE INSPECTED FOR EROSION, SETTLEMENT, AND CRACKING. TOPSOIL WILL BE ADDED AS NECESSARY TO MAINTAIN DRAINAGE CHARACTERISTICS IN ACCORDANCE WITH THE ORIGINAL SPECIFICATIONS. AREAS AFFECTED BY THE ADDITION OF TOPSOIL WILL BE SEEDED AND FERTILIZED IN ACCORDANCE WITH THE ORIGINAL SEEDING SPECIFICATIONS.
4. TOPOGRAPHIC SURVEYING OF THE DETENTION POND AND STORM DRAINAGE SYSTEM MAY NEED TO BE PERIODICALLY PERFORMED TO VERIFY FUNCTIONALITY OF THE SYSTEM.

SURFACE WATER MANAGEMENT SYSTEM MAINTENANCE

1. INSPECTIONS PERFORMED, AS PART OF THE SCHEDULED ROUTINE INSPECTIONS AT THE SITE WILL DICTATE MAINTENANCE REQUIREMENTS FOR THE SURFACE WATER MANAGEMENT SYSTEM AT THE SITE. THE ITEMS TO BE ROUTINELY INSPECTED INCLUDE INLETS, CULVERTS, DRAINAGE PIPES, SEDIMENT CONTROLS, EROSION OF DRAINAGE DITCHES OR BERMS, AND THE CONDITION OF THE DETENTION PONDS.
2. INLETS CULVERTS, AND PIPES WILL BE VISUALLY INSPECTED TO ENSURE THAT NO OBSTRUCTIONS ARE HINDERING THE PERFORMANCE OF THE SURFACE WATER DRAINAGE SYSTEM
3. ANY SIGNIFICANT OBSTRUCTIONS FOUND WILL BE REMOVED.
4. INLETS ALSO WILL BE VISUALLY INSPECTED TO ENSURE THAT GRATES ARE IN PLACE.
5. ANY MISSING OR DAMAGED GRATES WILL BE REPLACED.
6. INLETS, CULVERTS, AND PIPES WILL BE VISUALLY INSPECTED FOR LEAKS OR STRUCTURAL DAMAGE.
7. ANY DAMAGED ITEMS WILL BE REPAIRED OR REPLACED IN ACCORDANCE TO WITH THE ORIGINAL SPECIFICATIONS.
8. AREAS ARE TO BE VISUALLY INSPECTED FOR SEDIMENT BUILD-UP INCLUDES DRAINAGE PIPES, DRAINAGE DITCHES AND THE AREA WITHIN THE POND SITE.
9. IF SEDIMENT BUILDUP OCCURS IN THE SURFACE WATER PIPING SYSTEM, THE SEDIMENT WILL BE CLEANED FROM THE PIPES TO MAINTAIN THEIR ORIGINAL HYDRAULIC CAPACITY.
10. IF SEDIMENT BUILDUP IS OBSTRUCTING THE NORMAL FLOW PATTERN IN THE DRAINAGE DITCHES, THE SEDIMENTS WILL BE REMOVED.
11. SURFACE WATER DITCHES AND DETENTION POND SIDE SLOPES WILL BE VISUALLY INSPECTED FOR EROSION AND GULLYING.
12. IF EROSION OCCURS IN SURFACE WATER DITCHES, TOPSOIL WILL BE ADDED AS NECESSARY TO MAINTAIN DRAINAGE CHARACTERISTICS IN ACCORDANCE TO THE ORIGINAL PLANS.
13. IF EROSION OCCURS ON THE DETENTION POND SIDE SLOPES, A FILL MATERIAL WILL BE ADDED AS NECESSARY TO MAINTAIN THE ORIGINAL GRADE OF THE SLOPE.
14. THE DETENTION POND WILL BE VISUALLY INSPECTED FOR THE PRESENCE OF LITTER. ANY LITTER WILL BE REMOVED ON A CONTINUAL BASIS.

EQUIPMENT REQUIREMENTS (WHEN APPLICABLE)

1. THE EQUIPMENT MAINTENANCE REQUIREMENTS WILL BE DETERMINED BASED UPON THE MANUFACTURERS RECOMMENDATIONS AND WILL BE INCLUDED ON THE DESIGN PLANS. AT A MINIMUM, LIFT STATIONS WILL REQUIRE DUPLEX SYSTEMS. THE ENGINEER OF RECORD WILL PROVIDE FOR CITY REVIEW EQUIPMENT OPERATION AND MAINTENANCE REQUIREMENTS.

CITY OF TOMBALL
ENGINEERING & PLANNING DEPARTMENT

POND MAINTENANCE REQUIREMENTS

APPROVED BY COT:

ENGINEERING & PLANNING DEPARTMENT
EFFECTIVE JULY 1, 2010

SHEET 001 OF 001 | DWG NO: COT STM-02

CAD FILE PATH:

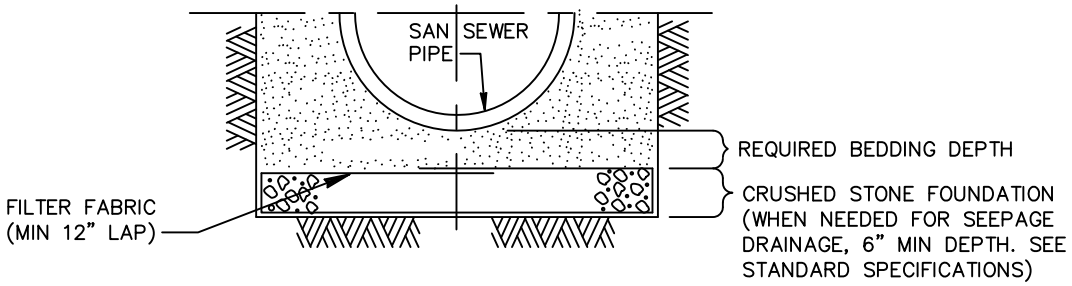

CROSS–SECTION OF CRUSHED STONE FOUNDATION

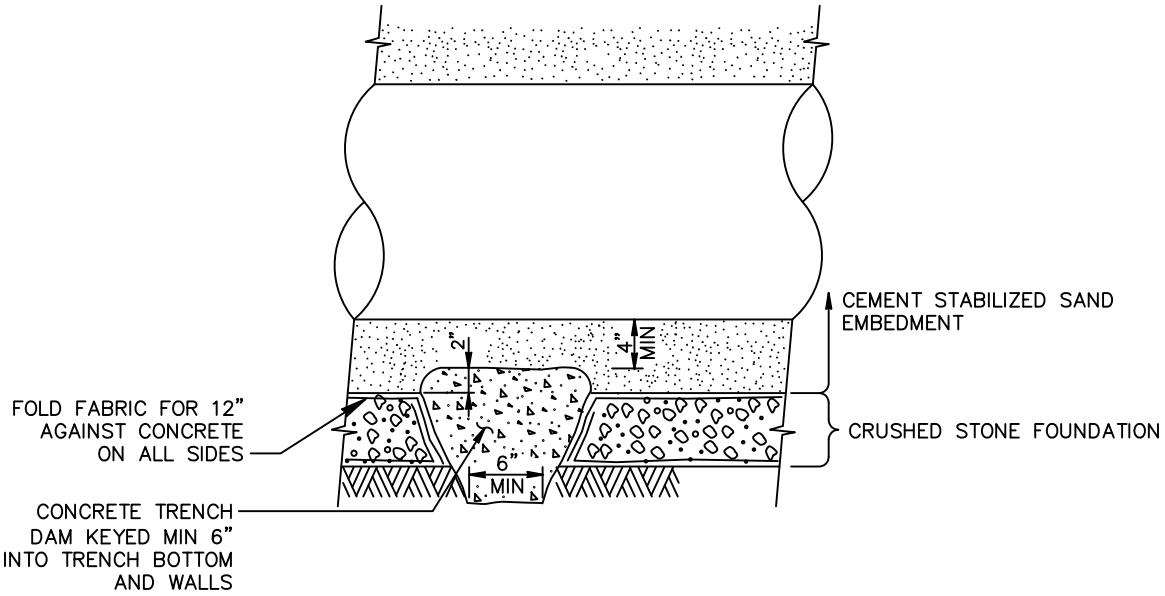

LONGITUDINAL SECTION ALONG PIPE ℄ AT FOUNDATION TRENCH DAM

NOTES:

1. ACTUAL SHAPE OF CONCRETE TRENCH DAM CROSS SECTION MAY BE DETERMINED BY CONTRACTOR IN FIELD, MEETING MINIMUM THICKNESS AND KEY DEPTH REQUIREMENTS.
2. THIS DETAIL SHALL BE USED WITH CEMENT STABILIZED SAND EMBEDMENT, OR OTHER CLASS II EMBEDMENT, IN WET STABLE TRENCH CONDITIONS.
3. PLACE TRENCH DAMS IN CLASS I EMBEDMENTS AT THE MIDPOINT OF LINE SEGMENTS LONGER THAN 100 FEET BETWEEN MANHOLES.

NOT TO SCALE

CITY OF TOMBALL
ENGINEERING & PLANNING DEPARTMENT

STORM CRUSHED STONE FOUNDATION FOR WET STABLE TRENCH

APPROVED BY COT:

ENGINEERING & PLANNING DEPARTMENT
EFFECTIVE JULY 1, 2010

SHEET 001 OF 001 | DWG NO: COT STM–03

CAD FILE PATH:

NOTES:

1. WHERE WET SAND IS ENCOUNTERED, REINFORCED CONCRETE PIPE SEWERS SHALL BE CONSTRUCTED USING APPROVED SPECIAL DESIGN AS SHOWN ON DRAWINGS.
2. MIN TRENCH WIDTH SHALL BE PIPE OD PLUS AN ALLOWANCE "A" FOR THE NOMINAL PIPE SIZE:

NOMINAL PIPE SIZE	"A"
18" TO 30"	24"
OVER 30"	36"

3. MAX TRENCH WIDTH SHALL NOT BE GREATER THAN MIN TRENCH WIDTH PLUS 24 INCHES, UNLESS OTHERWISE NOTED.
4. SELECT BACKFILL FOR RIGID PAVEMENT; FLEXIBLE BASE MATERIAL FOR ASPHALT PAVEMENT.

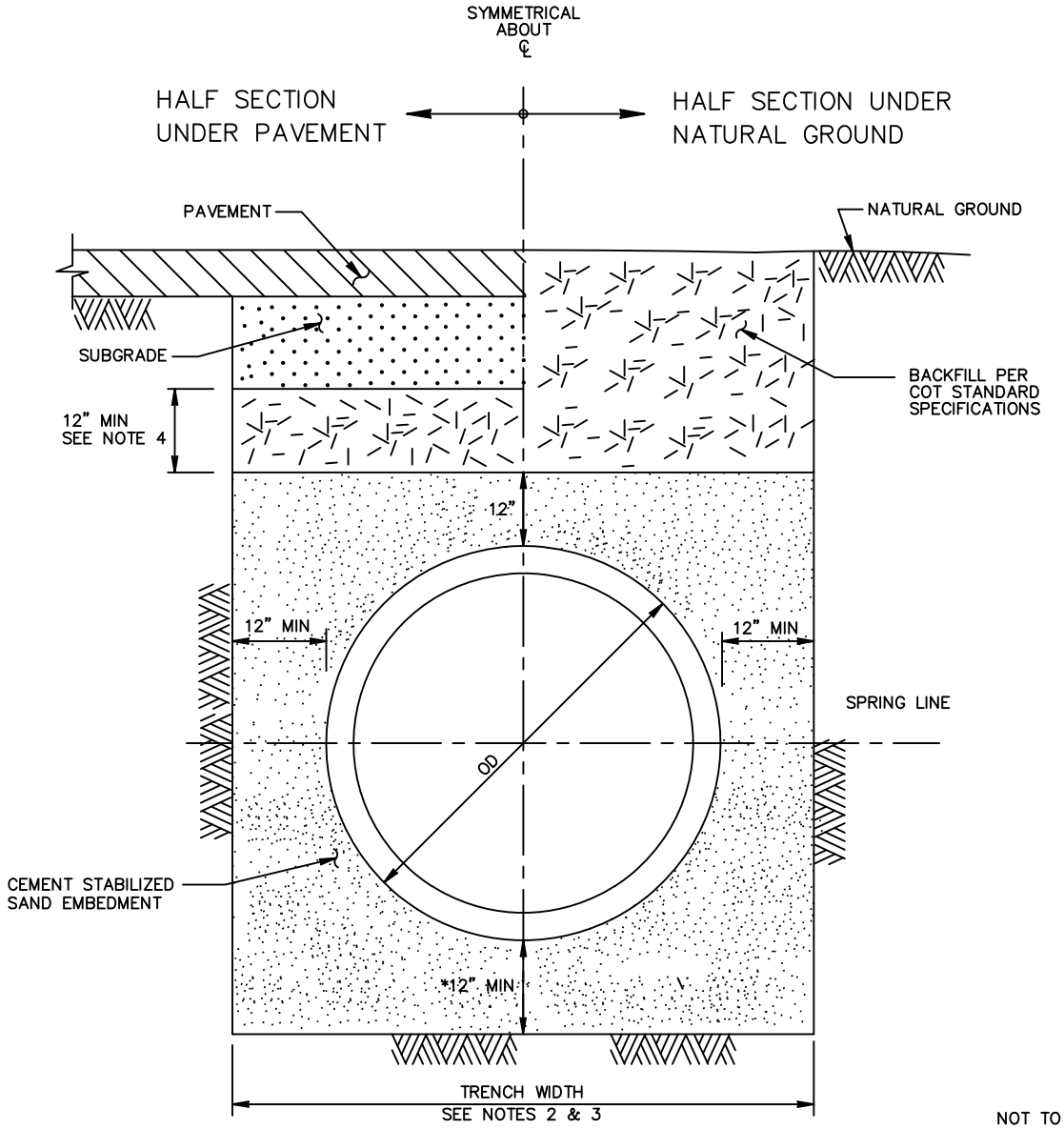

NOT TO SCALE

* MINIMUM DEPTH 7" FOR 36" OR SMALLER HDPE PIPES.

CITY OF TOMBALL
ENGINEERING & PLANNING DEPARTMENT

STORM BEDDING & BACKFILL FOR DRY STABLE TRENCH

APPROVED BY COT:

ENGINEERING & PLANNING DEPARTMENT
EFFECTIVE JULY 1, 2010

SHEET 001 OF 001 | DWG NO: COT STM-04

CAD FILE PATH:

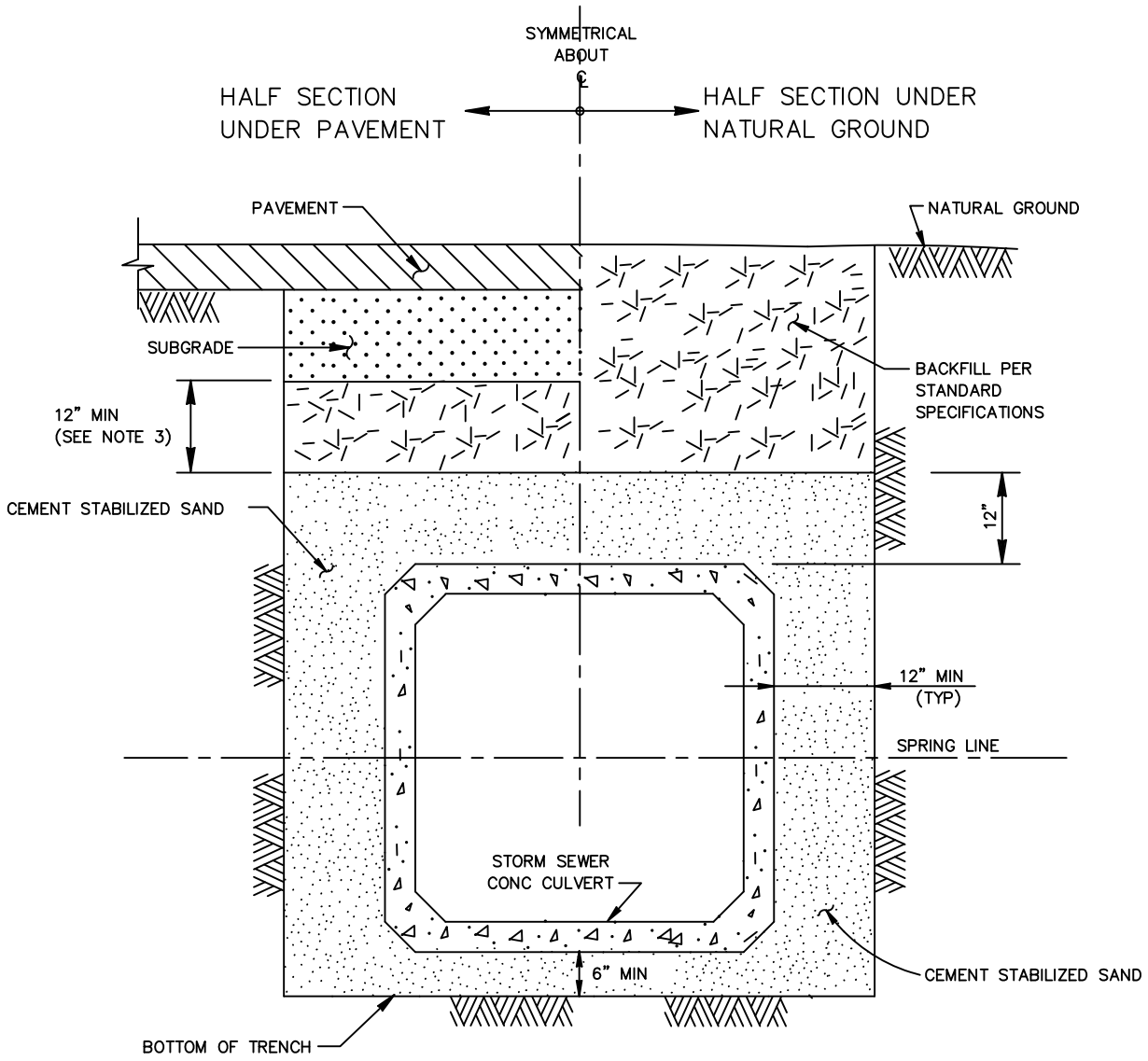

NOTES:

1. WHERE MULTIPLE BOX SEWERS ARE USED IN THE SAME TRENCH, MIN OUTSIDE TO OUTSIDE BOX SEWER SEPARATION SHALL BE 6".
2. THIS DETAIL TO BE USED ONLY WHERE SOIL CONDITIONS ARE SATISFACTORY.
3. SELECT BACKFILL FOR RIGID PAVEMENT; FLEXIBLE BASE MATERIAL FOR ASPHALT PAVEMENT.

NOT TO SCALE

CITY OF TOMBALL
ENGINEERING & PLANNING DEPARTMENT

PRECAST CONCRETE BOX FOR DRY STABLE TRENCH

APPROVED BY COT:

ENGINEERING & PLANNING DEPARTMENT
EFFECTIVE JULY 1, 2010

SHEET 001 OF 001 | DWG NO: COT STM-05

CAD FILE PATH:

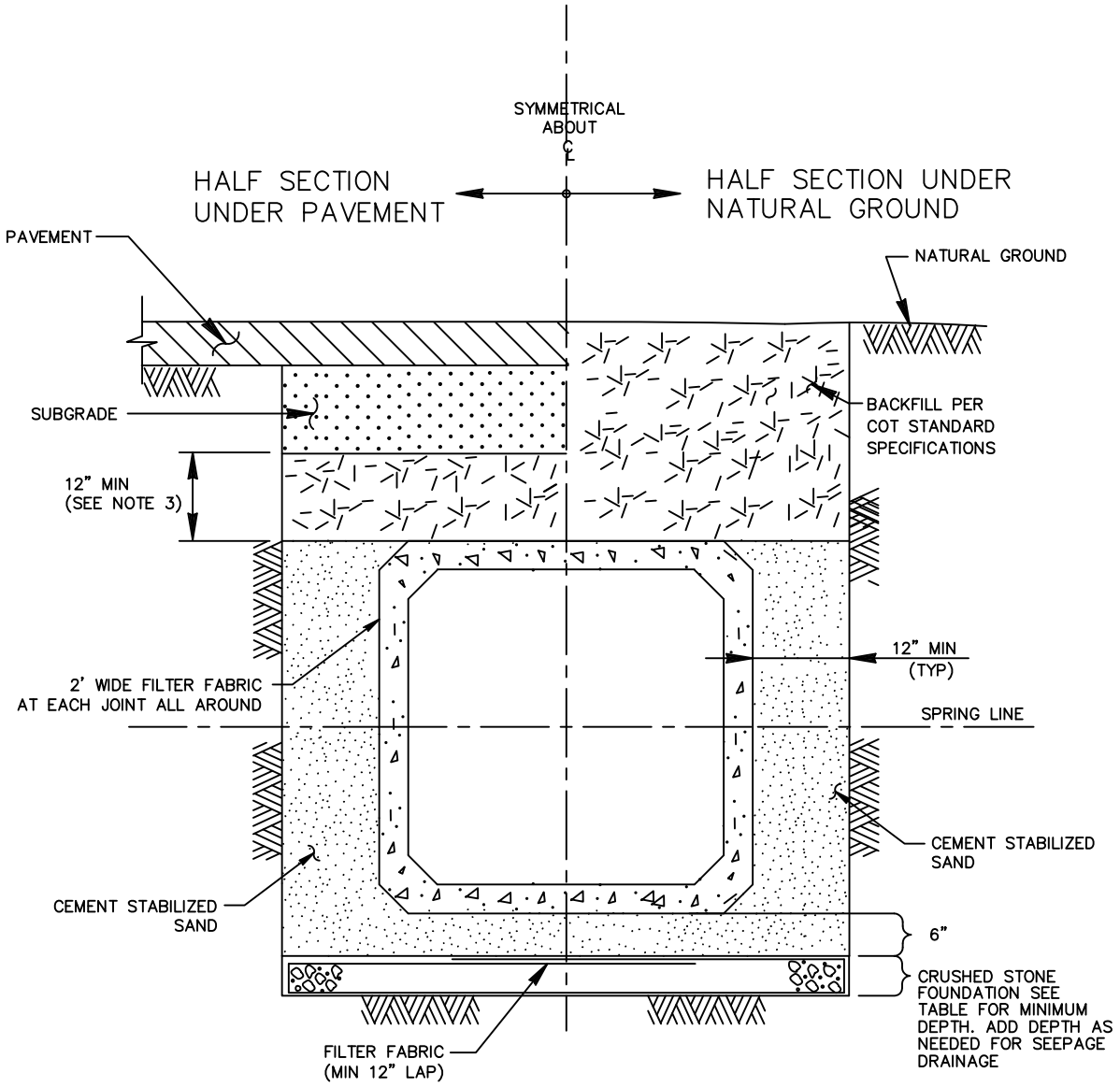

NOTES:

1. WHERE MULTIPLE BOX SEWERS ARE USED IN THE SAME TRENCH, MIN OUTSIDE TO OUTSIDE BOX SEWER SEPARATION SHALL BE 6".
2. ALTERNATE TRENCH BOTTOM TREATMENT MAY BE USED AS APPROVED BY THE CITY ENGINEER.

CULVERT SIZE (IN)	FOUNDATION DEPTH (IN)
3' X 2' TO 6' X 6'	12
6' X 6' AND LARGER	18

NOT TO SCALE

CITY OF TOMBALL
ENGINEERING & PLANNING DEPARTMENT

PRECAST CONCRETE BOX FOR WET STABLE TRENCH

APPROVED BY COT:

ENGINEERING & PLANNING DEPARTMENT
EFFECTIVE JULY 1, 2010

SHEET 001 OF 001 | DWG NO: COT STM-06

CAD FILE PATH:

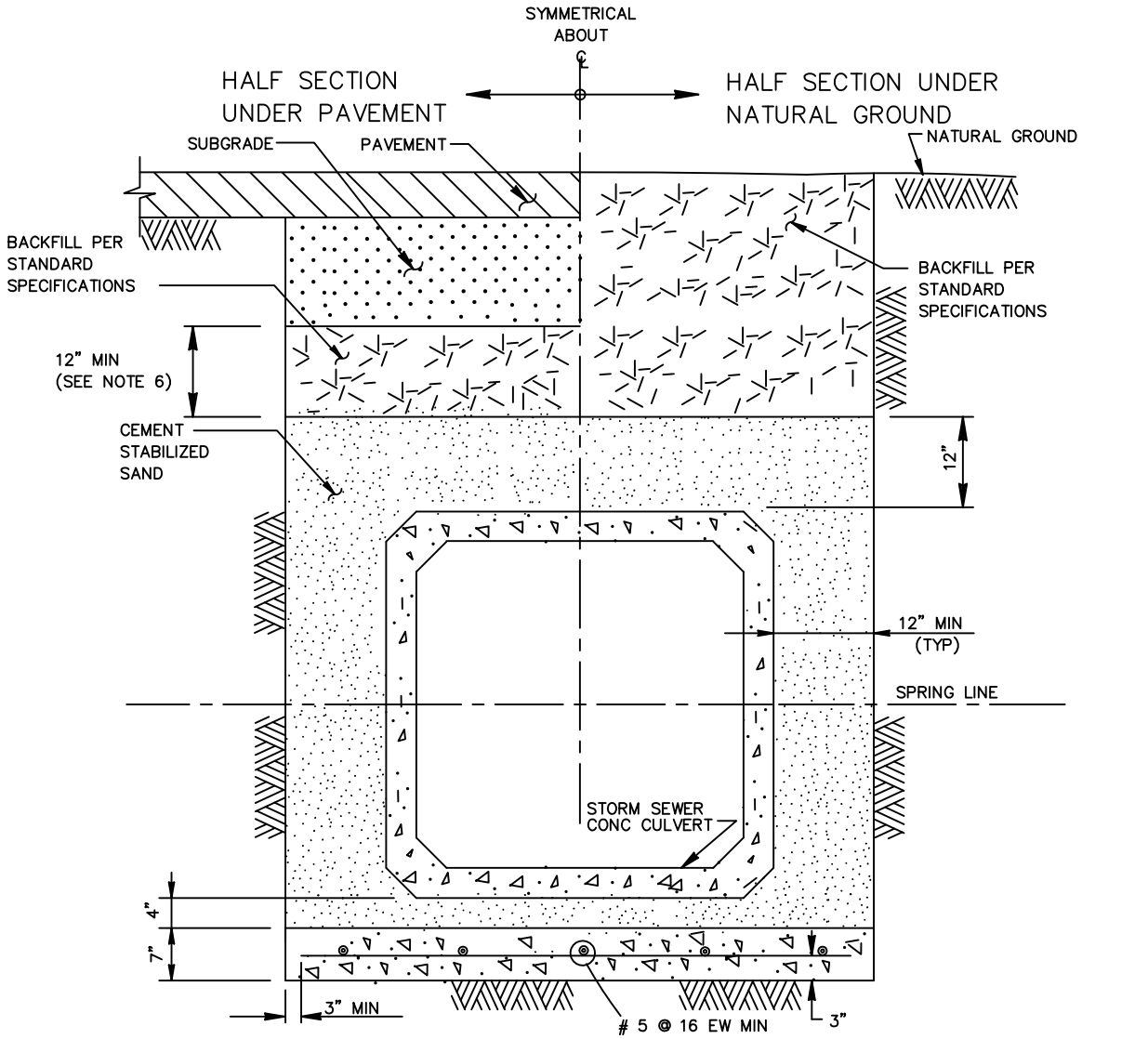

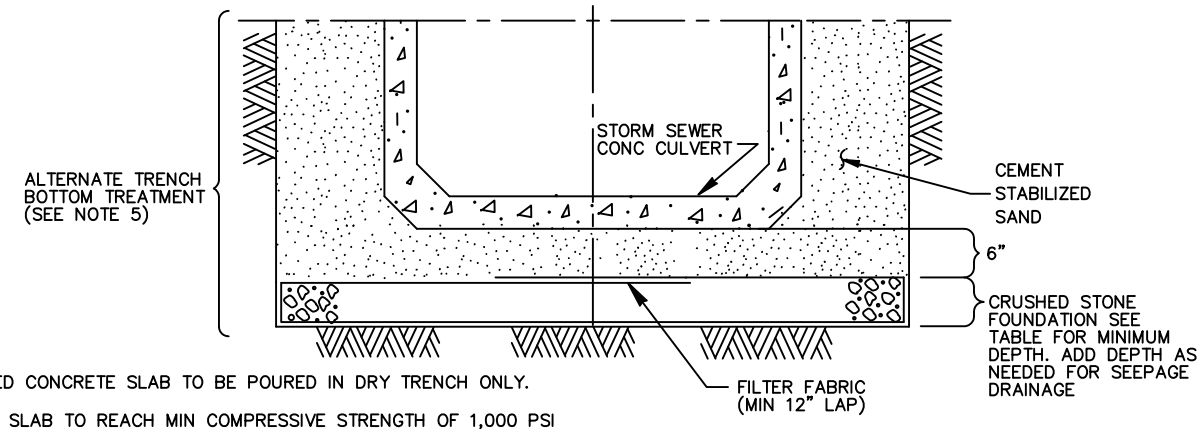

NOTES:

1. REINFORCED CONCRETE SLAB TO BE POURED IN DRY TRENCH ONLY.
2. CONCRETE SLAB TO REACH MIN COMPRESSIVE STRENGTH OF 1,000 PSI BASED ON MIX DESIGN BEFORE BOX IS LAID.
3. WHERE MULTIPLE BOX SEWERS ARE USED IN THE SAME TRENCH, MIN OUTSIDE TO OUTSIDE BOX SEWER SEPARATION SHALL BE 6".
4. THIS BEDDING DETAIL TO BE USED FOR ALL LOCATIONS WHERE SOIL CONDITIONS DO NOT CONFORM TO FOLLOWING REQUIREMENTS:
   A. STRATA FROM SPRING LINE (CENTER) TO 3 FT. BELOW THE FLOWLINE OF THE BOX TO CONSIST OF NON-WATERBEARING COHESIVE SOIL HAVING A SHEAR STRENGTH OF 1000 PSF OR GREATER.
   B. NO WET SAND STRATA TO EXIST IN THE AREA FROM 1 FT. ABOVE THE TOP OF THE BOX TO 3 FT. BELOW THE FLOW LINE.
5. ALTERNATE TRENCH BOTTOM TREATMENT MAY BE USED AS APPROVED BY THE CITY ENGINEER AND AS PAID FOR IN THE PROPOSAL.

CULVERT SIZE (FT)	FOUNDATION DEPTH (IN)
3' x 2' TO 6' x 6'	12
6' x 6' AND LARGER	18

6. SELECT BACKFILL FOR RIGID PAVEMENT; FLEXIBLE BASE MATERIAL FOR ASPHALT PAVEMENT.

NOT TO SCALE

CITY OF TOMBALL
ENGINEERING & PLANNING DEPARTMENT

PRECAST CONCRETE BOX WITH SEAL SLAB

APPROVED BY COT:

ENGINEERING & PLANNING DEPARTMENT
EFFECTIVE JULY 1, 2010

SHEET 001 OF 001 | DWG NO: COT STM-07

CAD FILE PATH:

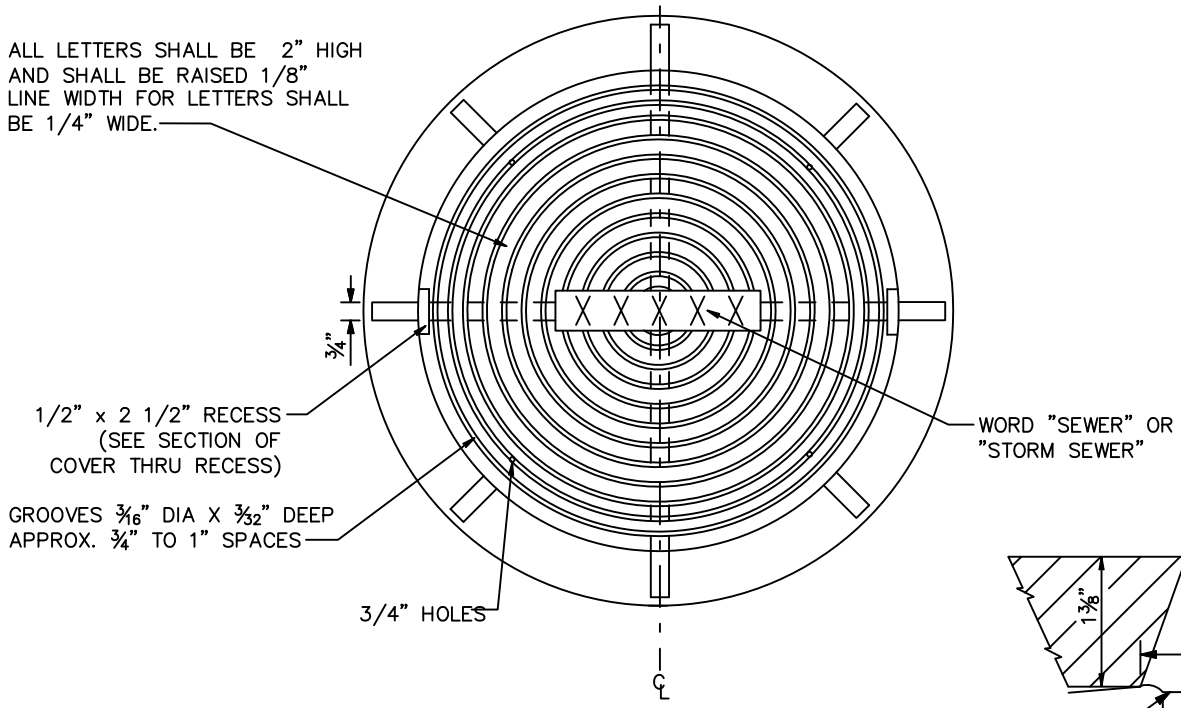

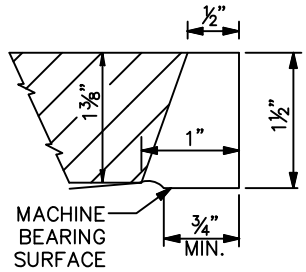

SECTION OF COVER THRU RECESS

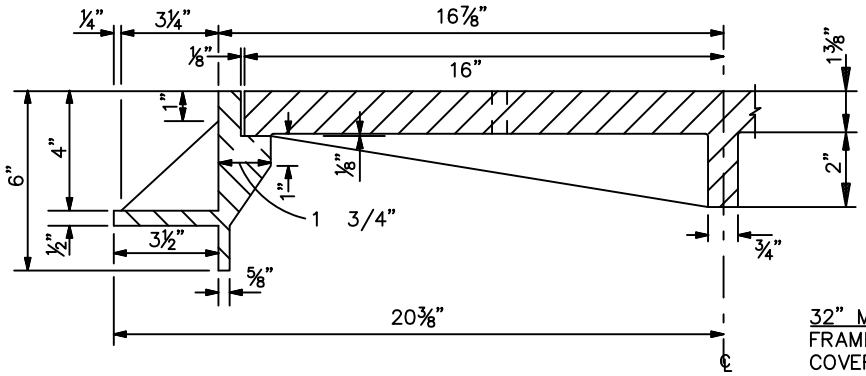

32" MANHOLE FRAME & COVER
FRAME: VULCAN MODEL V-1420 OR EQUAL
COVER: VULVAN MODEL V-1419

HALF SECTION
32" MANHOLE COVER WITH FRAME

NOT TO SCALE

CITY OF TOMBALL
ENGINEERING & PLANNING DEPARTMENT

STORM SEWER MANHOLE FRAME & COVER CONSTRUCTION DETAILS

APPROVED BY COT:

ENGINEERING & PLANNING DEPARTMENT
EFFECTIVE JULY 1, 2010

SHEET 001 OF 001 | DWG NO: COT STM-08

CAD FILE PATH:

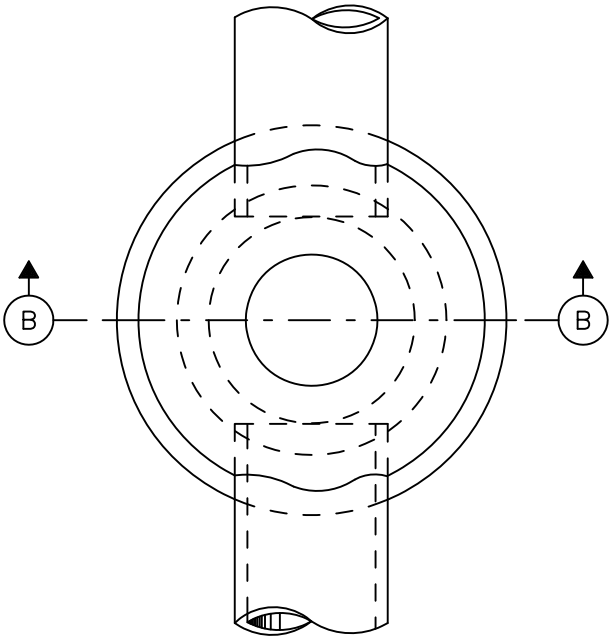

PLAN OF TYPE "C"
(COVER NOT SHOWN)

NOTE:
BRICK WALLS 12'–0" BELOW TOP OF CASTING TO BE 12" THICK. STD. FRAME & COVER SHALL BE PER COT STANDARD MH COVER

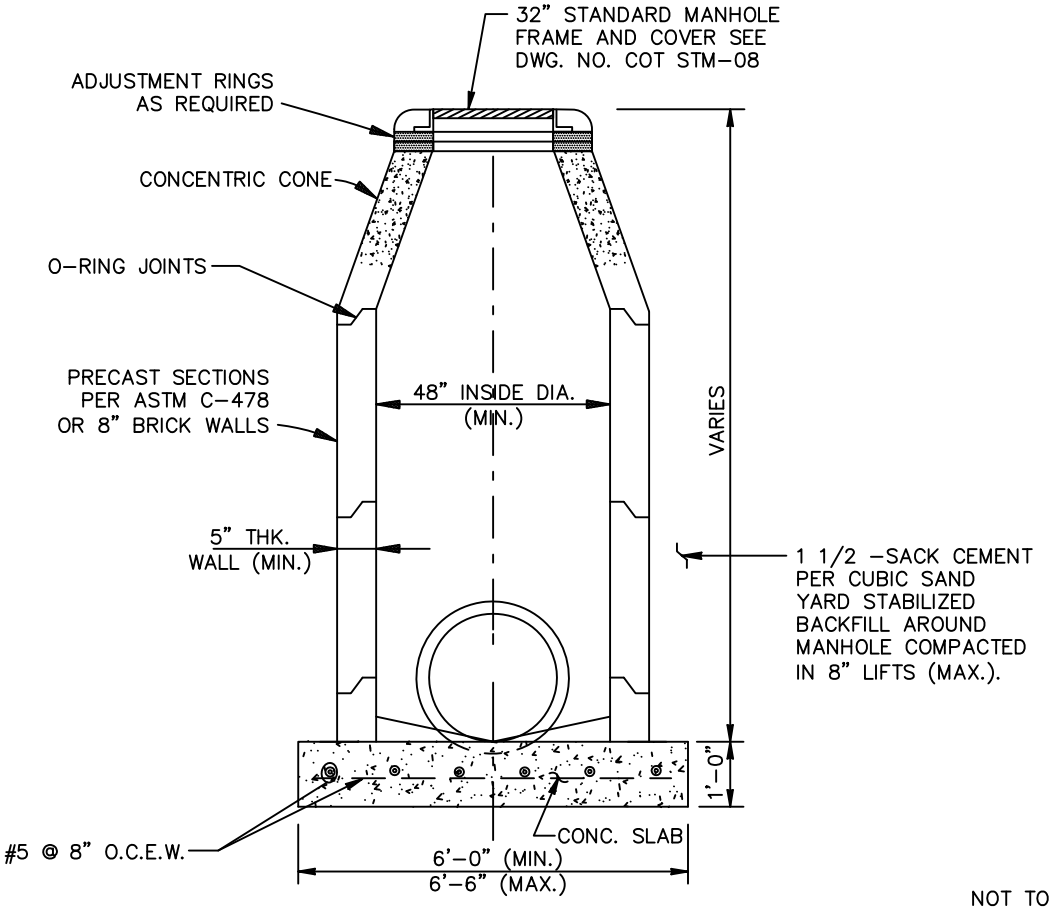

SECTION B–B

NOT TO SCALE

CITY OF TOMBALL
ENGINEERING & PLANNING DEPARTMENT

TYPE "C"
STORM SEWER MANHOLE
FOR 42" PIPE AND SMALLER

APPROVED BY COT:

ENGINEERING & PLANNING DEPARTMENT
EFFECTIVE JULY 1, 2010

SHEET 001 OF 001 | DWG NO: COT STM–09

CAD FILE PATH:

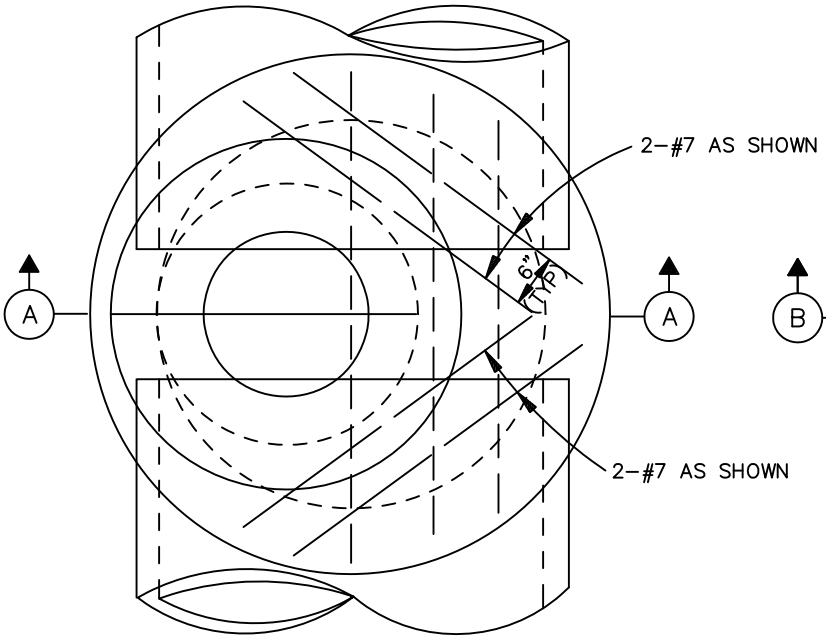

PLAN

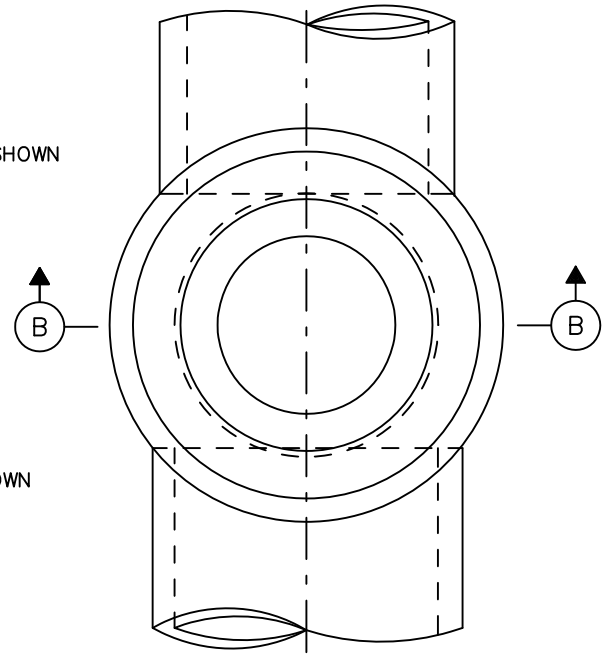

PLAN

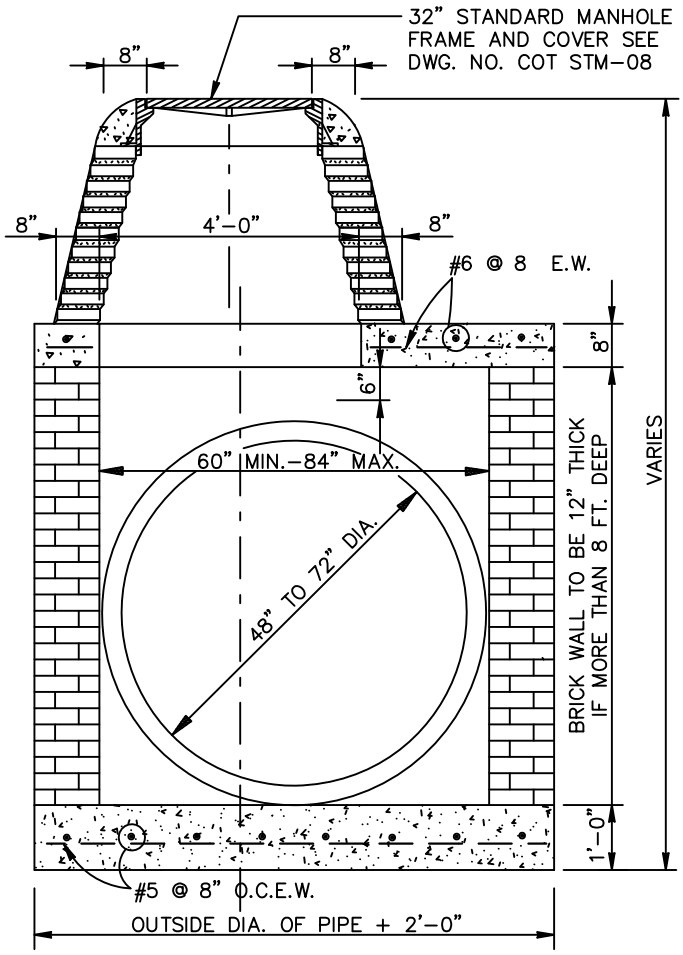

SECTION A–A

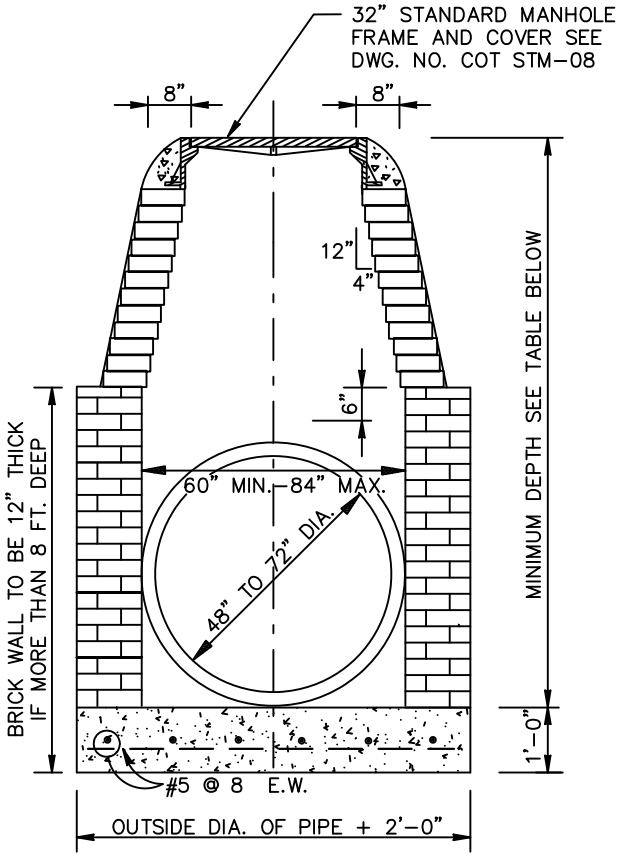

SECTION B–B

NOT TO SCALE

NOTES:
1. WHEN MANHOLE HAS LESS DEPTH THAN MIN. SHOWN ON CHART, BUILD SECTION A–A OTHERWISE BUILD SECTION B–B.
2. MANHOLE MAY BE CONSTRUCTED OF PRECAST REINFORCED CONCRETE.

SIZE OF PIPE	MIN. DEPTH
48"	8'–0"
54"	9'–4"
60"	10'–7"
66"	11'–10"
72"	13'–2"

CITY OF TOMBALL
ENGINEERING & PLANNING DEPARTMENT

TYPE "C" MANHOLE FOR 48" TO 72" CONCRETE PIPE STORM SEWERS

APPROVED BY COT:

ENGINEERING & PLANNING DEPARTMENT
EFFECTIVE JULY 1, 2010

SHEET 001 OF 001 | DWG NO: COT STM–10

CAD FILE PATH:

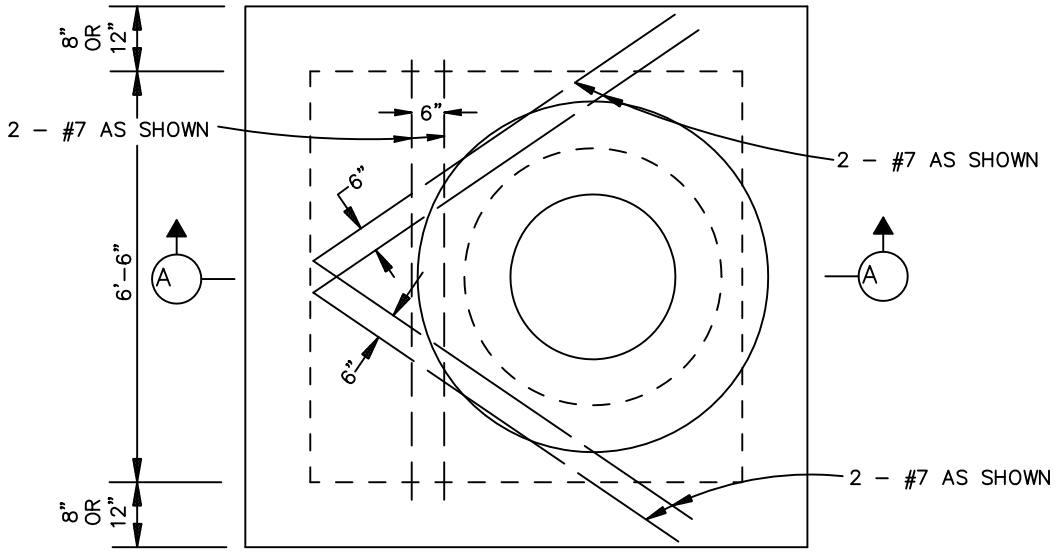

PLAN

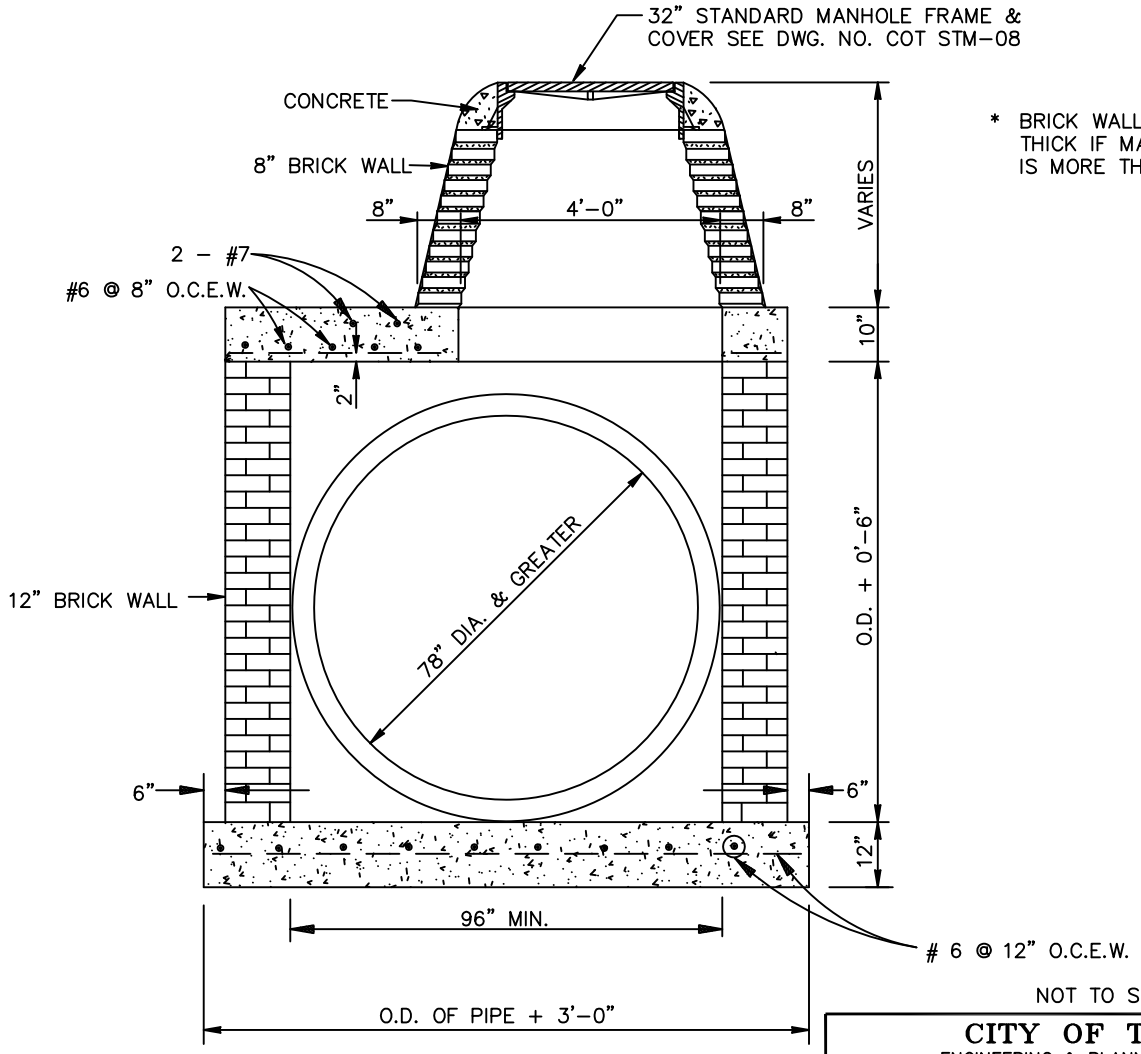

* BRICK WALLS TO BE 12" THICK IF MANHOLE DEPTH IS MORE THAN 8 FT.

SECTION A–A

NOT TO SCALE

NOTE:
1. MANHOLE MAY BE CONSTRUCTED OF PRECAST REINFORCED CONCRETE.

CITY OF TOMBALL
ENGINEERING & PLANNING DEPARTMENT

SPECIAL TYPE "C" STORM SEWER MANHOLE FOR 78" PIPE AND GREATER

APPROVED BY COT:

ENGINEERING & PLANNING DEPARTMENT
EFFECTIVE JULY 1, 2010

SHEET 001 OF 001 | DWG NO: COT STM–11

CAD FILE PATH:

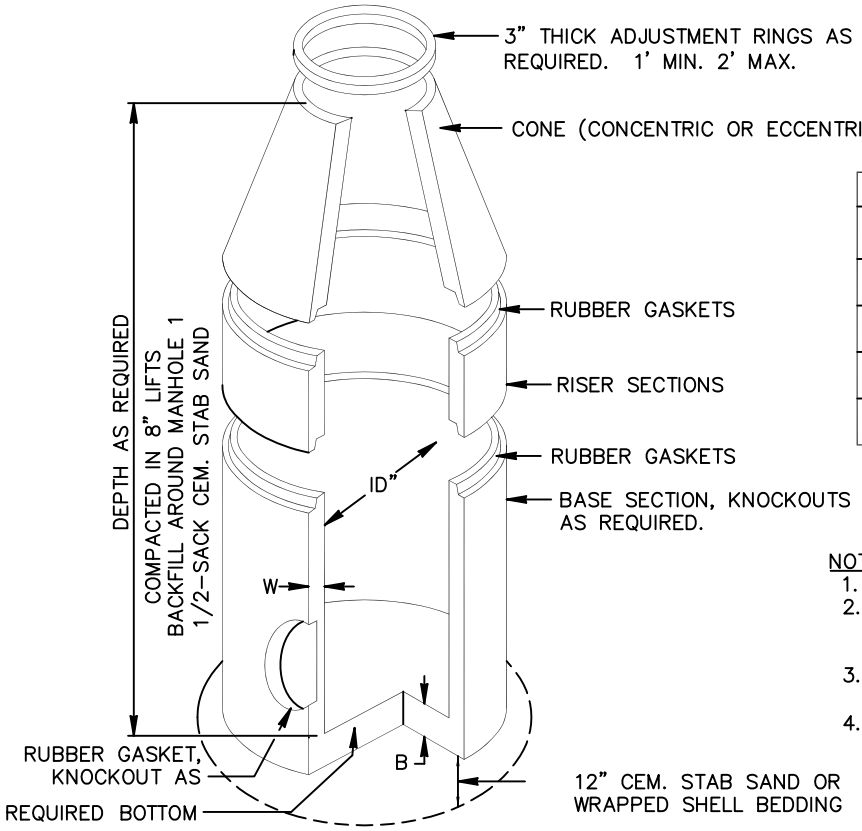

DIMENSIONS AND WEIGHTS			
I.D. SIZE (in)	W (in)	B (in)	RISER WT/LF (lb)
48	5	6	868
60	6	8	1300
72	7	8	1811
96	9	8	3090

NOTES:
1. LIFTING INSERTS AS REQUIRED.
2. ALL JOINTS SHALL BE SEALED WITH APPROVED RUBBER GASKET
3. STRUCTURE TO BE PLACED ON 12" STABILIZED BASE.
4. C.S.S. SHALL BE BROUGHT TO WITHIN 2-FT OF TOP OF MANHOLE.

SPECIFICATIONS:

CONCRETE: CLASS 1 CONCRETE WITH A DESIGN STRENGTH OF 4500 PSI AT 28 DAYS. RATES FOR H-20 LOADING.

REINFORCEMENT: STRUCTURAL REINFORCEMENT CONFORMING TO ASTM-C-478.

C.I. CASTINGS: CAST IRON FRAMES AND GRATES ARE MANUFACTURED OF GREY CAST IRON CONFORMING TO ASTM A48-76 CLASS 35.

PRECAST CONCRETE MANHOLE

NOT TO SCALE

CITY OF TOMBALL
ENGINEERING & PLANNING DEPARTMENT

PRECAST CONCRETE MANHOLE CONSTRUCTION DETAILS

APPROVED BY COT:

ENGINEERING & PLANNING DEPARTMENT
EFFECTIVE JULY 1, 2010

SHEET 001 OF 001 | DWG NO: COT STM-12

CAD FILE PATH:

CAD FILE PATH:

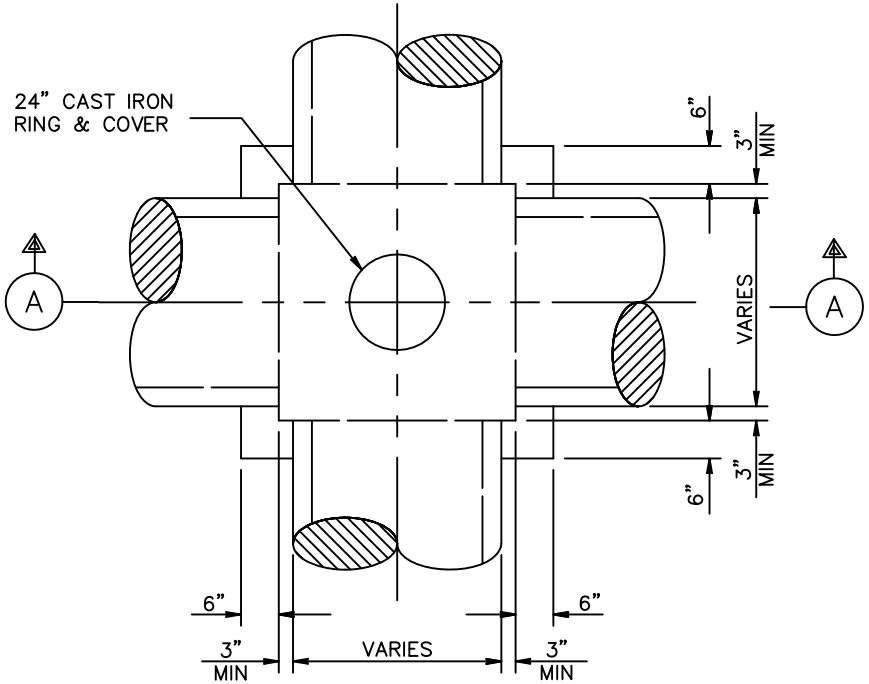

PLAN VIEW

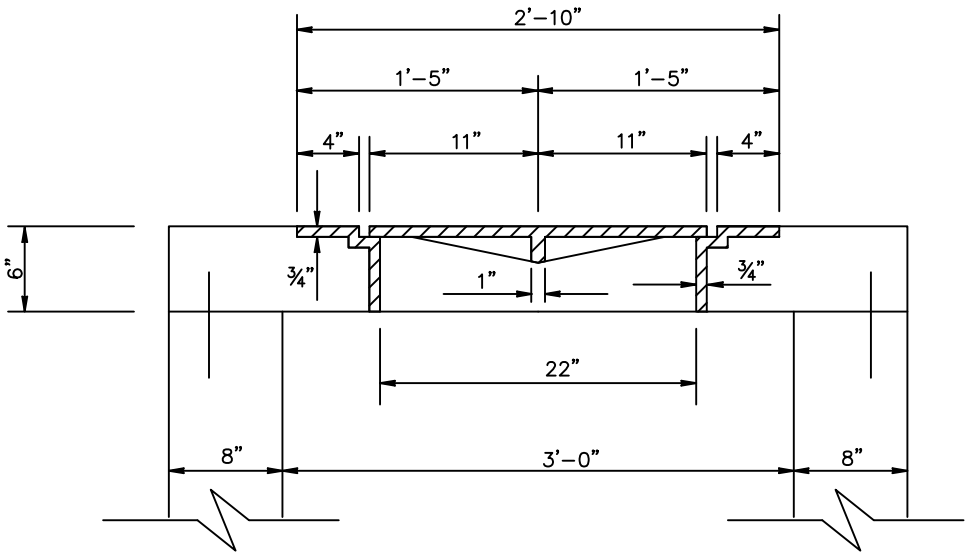

FRAME AND COVER SECTION

NOTES:

1. DETAIL TO BE USED WHERE STORM SEWER SIZE IS 24" DIAMETER OR LESS.
2. FOR PIPE SEWERS GREATER THAN 24", USE TYPE "C" MANHOLE

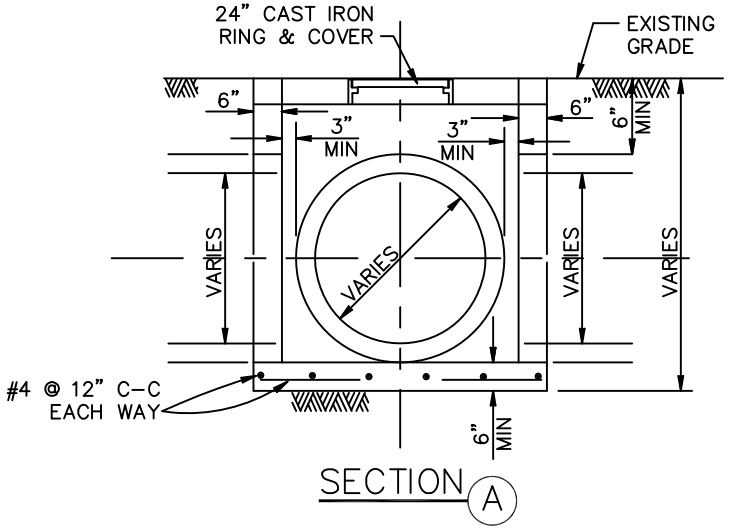

SECTION A

NOT TO SCALE

CITY OF TOMBALL
ENGINEERING & PLANNING DEPARTMENT

STORM SEWER JUNCTION BOX FOR MAX 24" DIAMETER PIPE

APPROVED BY COT:

ENGINEERING & PLANNING DEPARTMENT
EFFECTIVE JULY 1, 2010

SHEET 001 OF 001 | DWG NO: COT STM-13

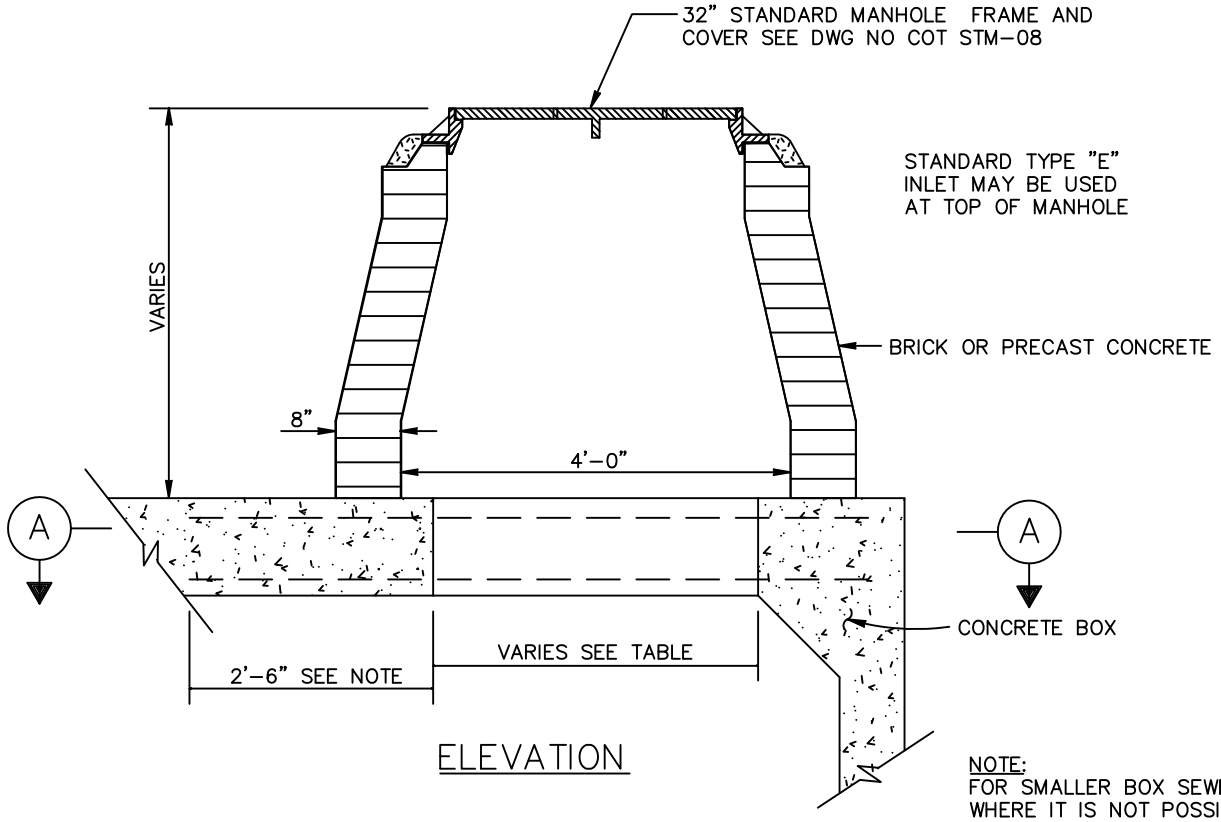

ELEVATION

NOTE:
FOR SMALLER BOX SEWER WIDTHS, WHERE IT IS NOT POSSIBLE TO EXTEND REINFORCING STEEL BEYOND THE OPENING, REINFORCING STEEL SHALL BE EXTENDED 3" TO THE EDGE OF THE WALL.

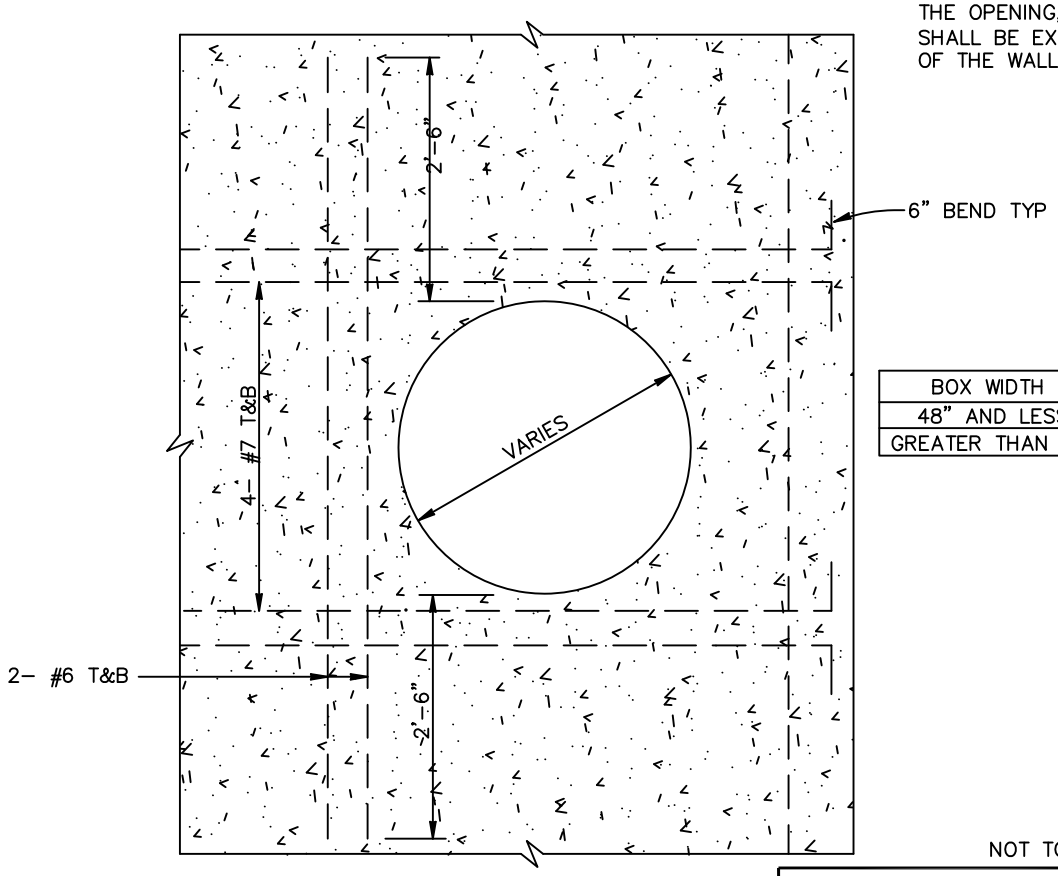

BOX WIDTH	OPENING SIZE
48" AND LESS	36"
GREATER THAN 48"	48"

SECTION A-A

NOT TO SCALE

CITY OF TOMBALL
ENGINEERING & PLANNING DEPARTMENT

MANHOLE FOR PROPOSED BOX STORM SEWER CONSTRUCTION DETAILS

APPROVED BY COT:

ENGINEERING & PLANNING DEPARTMENT
EFFECTIVE JULY 1, 2010

SHEET 001 OF 001 | DWG NO: COT STM-14

CAD FILE PATH:

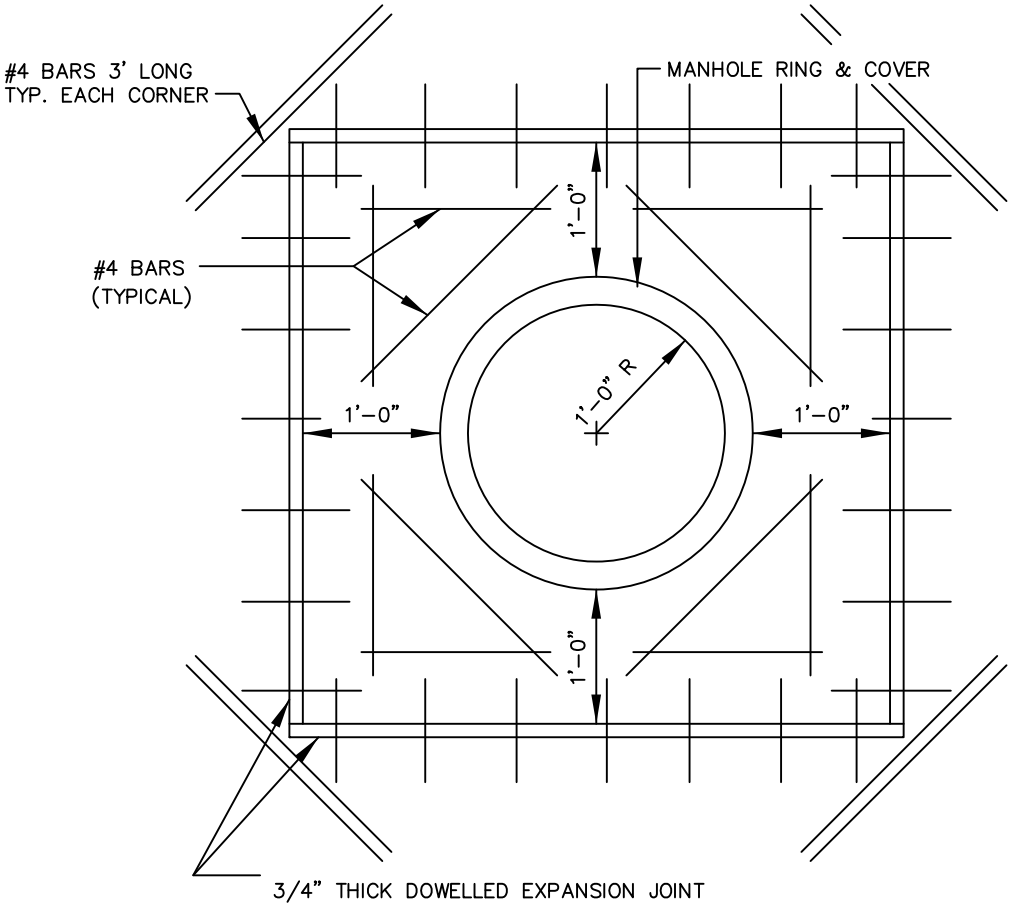

MANHOLE BLOCKOUT

(STORM SEWER)

IN PAVEMENT

NOT TO SCALE

CITY OF TOMBALL
ENGINEERING & PLANNING DEPARTMENT

MANHOLE BLOCKOUT
FOR STORM SEWER
IN PAVEMENT DETAIL

APPROVED BY COT:

ENGINEERING & PLANNING DEPARTMENT
EFFECTIVE JULY 1, 2010

SHEET 001 OF 001 | DWG NO: COT STM-15

CAD FILE PATH:

CAD FILE PATH:

TYPE "A" INLET

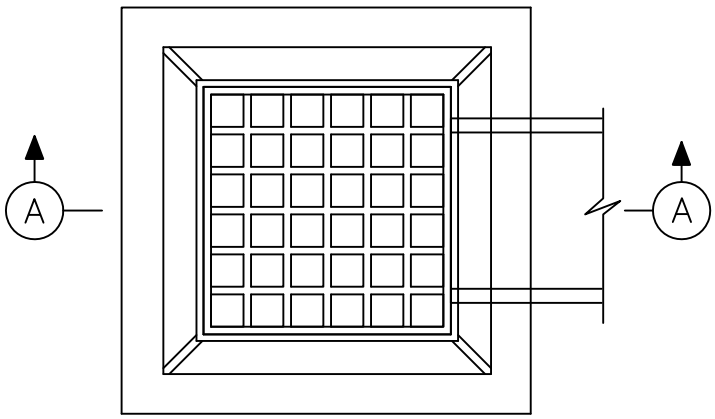

PLAN

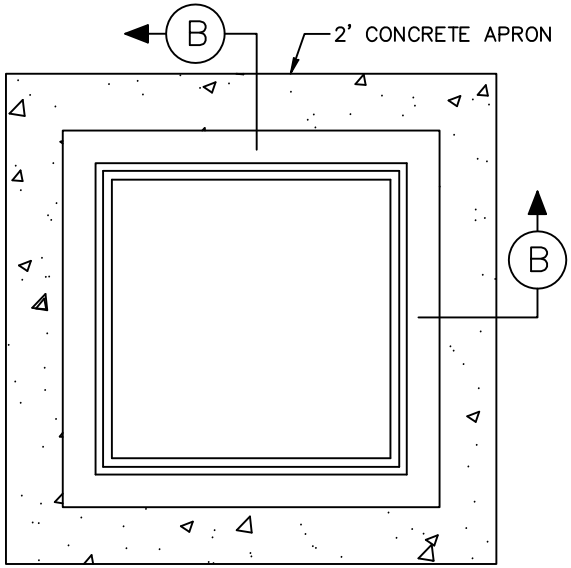

FRAME

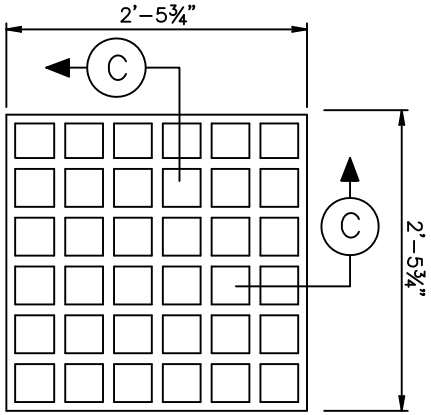

GRATE

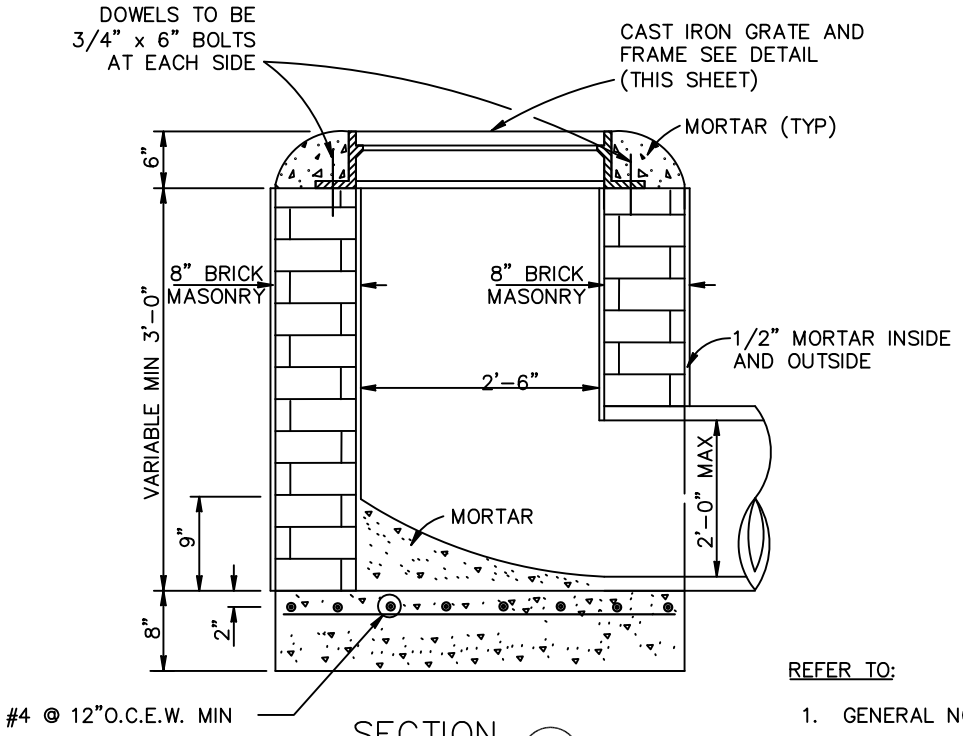

SECTION A

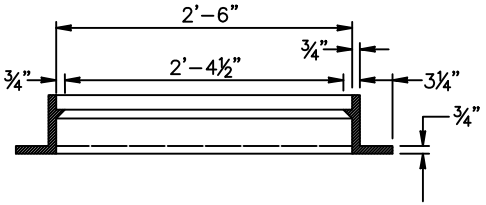

SECTION B

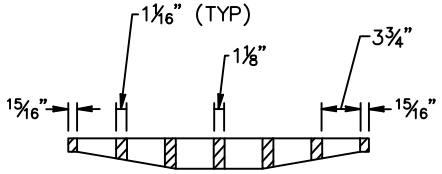

SECTION C

GENERAL CONSTRUCTION NOTES:

1. ALL BRICK CONSTRUCTION SHALL USE APPROVED CONCRETE BRICK WITH 1/2" (IN.) MORTAR INSIDE AND OUT. 1/4" TO 1/2' MORTAR JOINT, 3/8" (IN.) IS THE STANDARD.

REFER TO:

1. GENERAL NOTES, C.S.S & CONCRETE NOTES
2. STORM SEWER NOTES

NOT TO SCALE

CITY OF TOMBALL
ENGINEERING & PLANNING DEPARTMENT

TYPE "A"
INLET
CONSTRUCTION DETAILS

APPROVED BY COT:

ENGINEERING & PLANNING DEPARTMENT
EFFECTIVE JULY 1, 2010

SHEET 001 OF 001 | DWG NO: COT STM-16

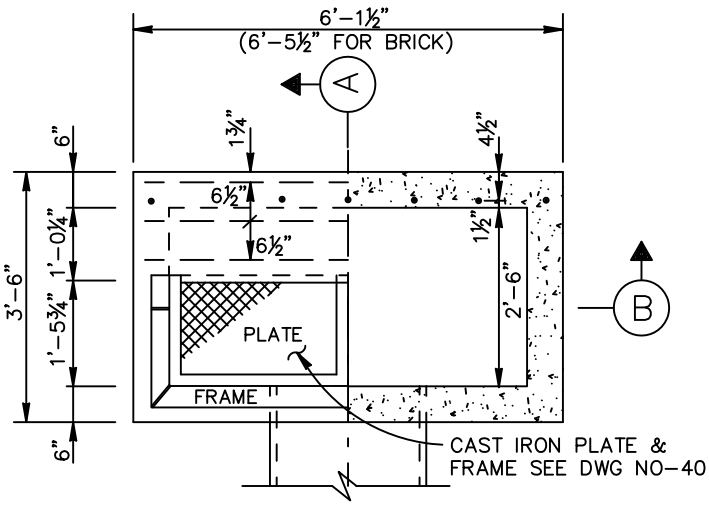

HALF PLAN HALF SECT. PLAN

GENERAL NOTES:
USE STD. CAST IRON FRAME & PLATES. LEAD SHALL LEAVE INLET AT LOCATION AND GRADE REQUIRED. WHEN BRICK INLETS ARE BUILT EXTEND DOWELS 4 INCHES FROM CURB BEAM INTO BRICKWORK. WHEN BRICK INLETS ARE BUILT, WALLS SHALL BE INCREASED TO 8 INCHES, AND INLET BEAMS TO BE 4 INCHES LONGER.

NOTES:
1. DIMENSION VARIES BASED ON PIPE DIAMETER AND WALL THICKNESS.
2. CENTER REINFORCING IN SLAB AND WALLS.
3. CENTER STEEL BEAM ON INLET AND CAST INTO WALLS AS SHOWN.

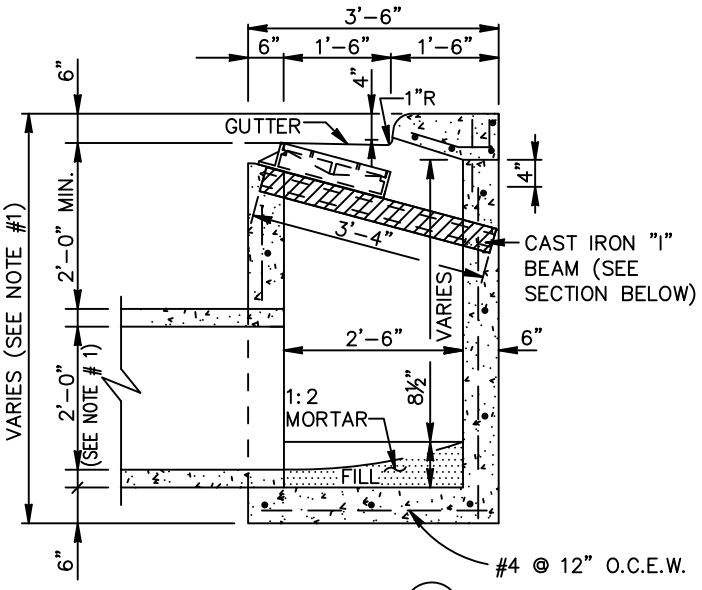

SECTION (A)

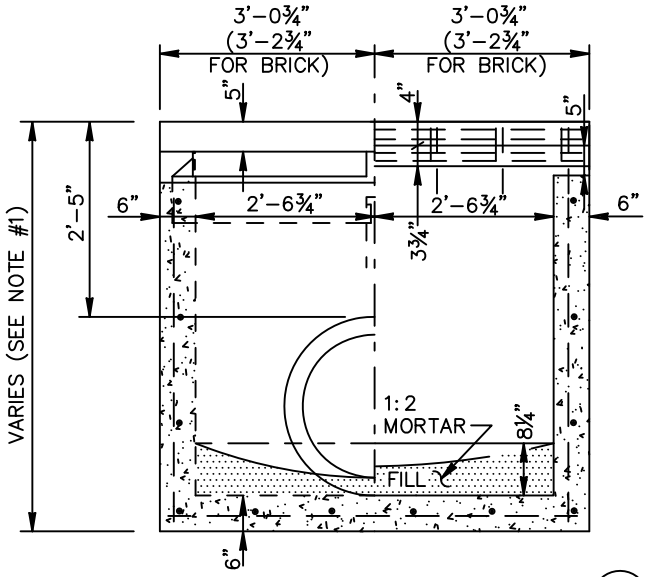

HALF FRONT ELEV. HALF SECT. (B)

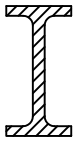

ACCEPTABLE
BEAM SIZES:
S6x17.5
W6x16

SECTION
THRU "I" BEAM

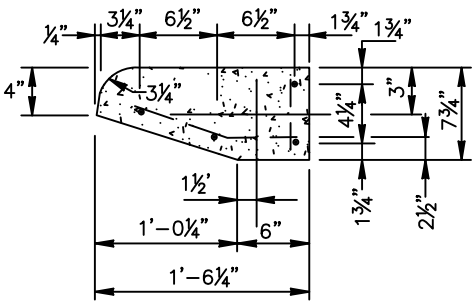

TRANS. SECTION

CURB BEAM BAR LIST				
NO.	SIZE	LENGTH	SHAPE	LOC.
4	# 4	5'-10"	ST.	HOR.
7	# 4	0'-10"	ST.	VERT.
7	# 3	1'-6"	BT.	

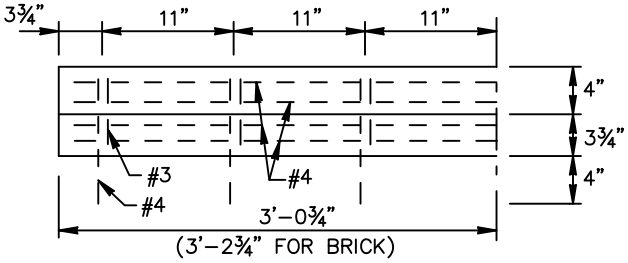

HALF FRONT ELEV.
PRECAST CURB BEAM

NOT TO SCALE

CITY OF TOMBALL
ENGINEERING & PLANNING DEPARTMENT

TYPE "B-B" INLET CONSTRUCTION DETAILS

APPROVED BY COT:

ENGINEERING & PLANNING DEPARTMENT
EFFECTIVE JULY 1, 2010

SHEET 001 OF 001 | DWG NO: COT STM-17

CAD FILE PATH:

STEP: 1 EXISTING TYPE "B–B" INLET

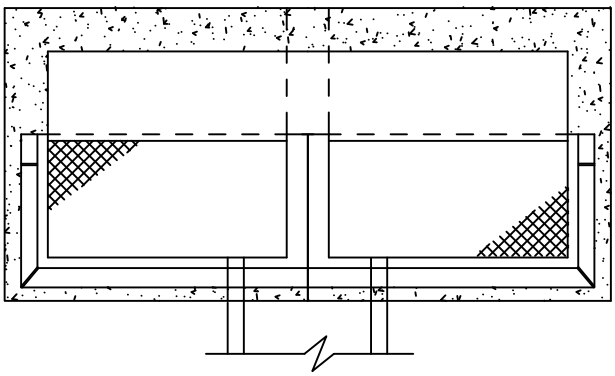

TOP VIEW

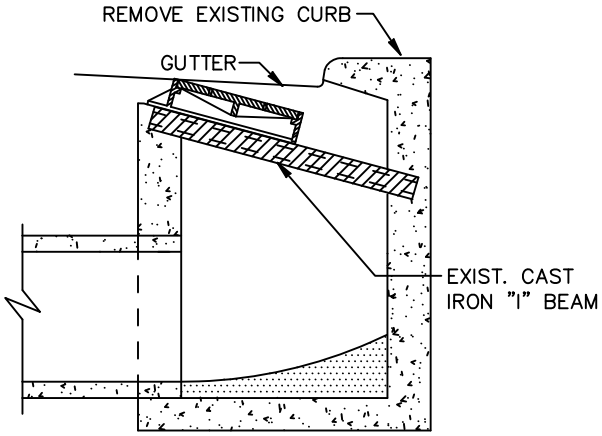

SIDE VIEW

STEP: 2

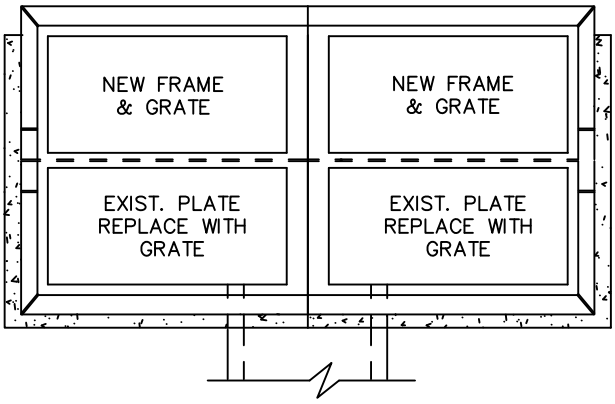

TOP VIEW

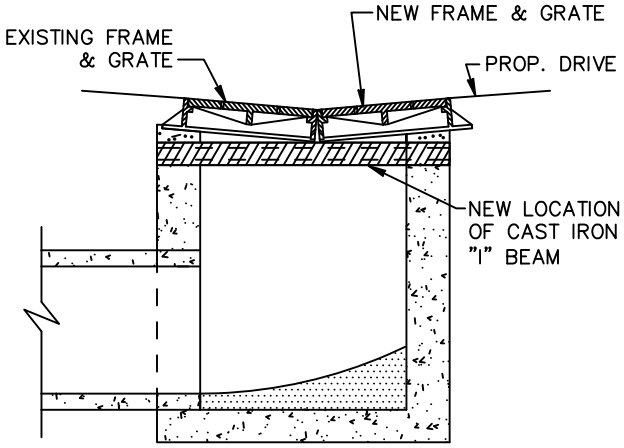

SIDE VIEW

1. AFTER REMOVING EXIST. CURB, RAISE EXIST. "I" BEAM TO GRADE AND RESET EXIST. FRAMES.
2. REPLACE EXIST. PLATES WITH GRATES.
3. ADD NEW FRAMES AND GRATES NEXT TO EXISTING FRAMES.
4. BACKFILL INLET TO A POINT ONE FOOT BEHIND THE CURB WITH 1 SACK/TON CEMENT STABILIZED SAND.

STEP: 3 CONSTRUCT NEW TYPE "B–B" INLET ON CURB RETURN OF PROPOSED DRIVEWAY.

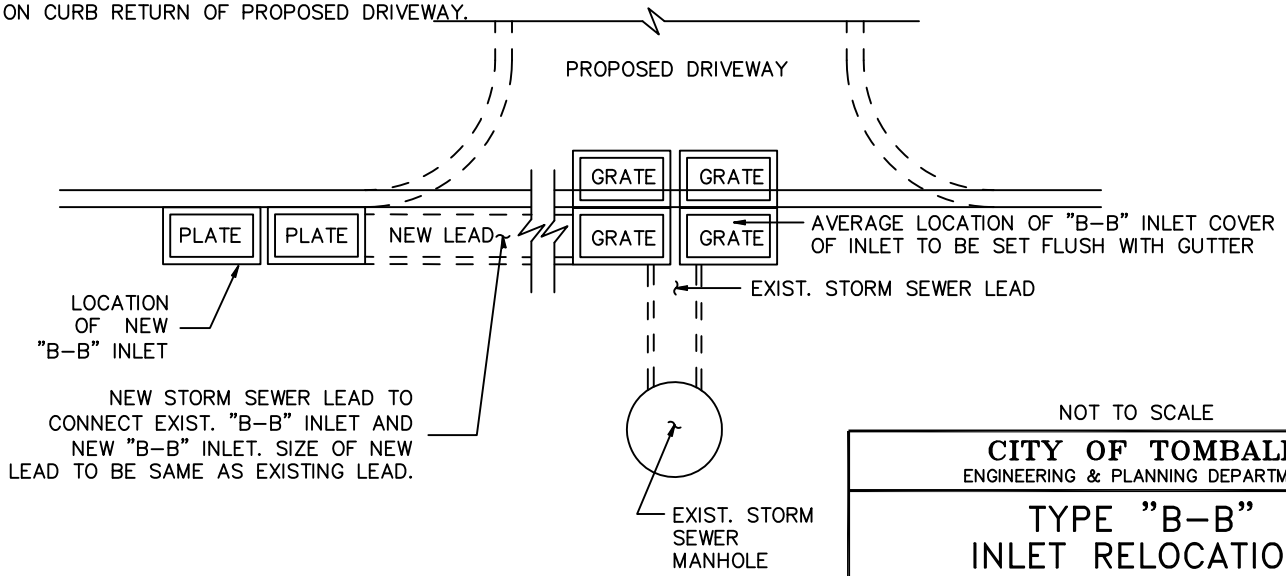

NOT TO SCALE

CITY OF TOMBALL
ENGINEERING & PLANNING DEPARTMENT

TYPE "B–B" INLET RELOCATION CONSTRUCTION DETAILS

APPROVED BY COT:

ENGINEERING & PLANNING DEPARTMENT
EFFECTIVE JULY 1, 2010

SHEET 001 OF 001 | DWG NO: COT STM–18

CAD FILE PATH:

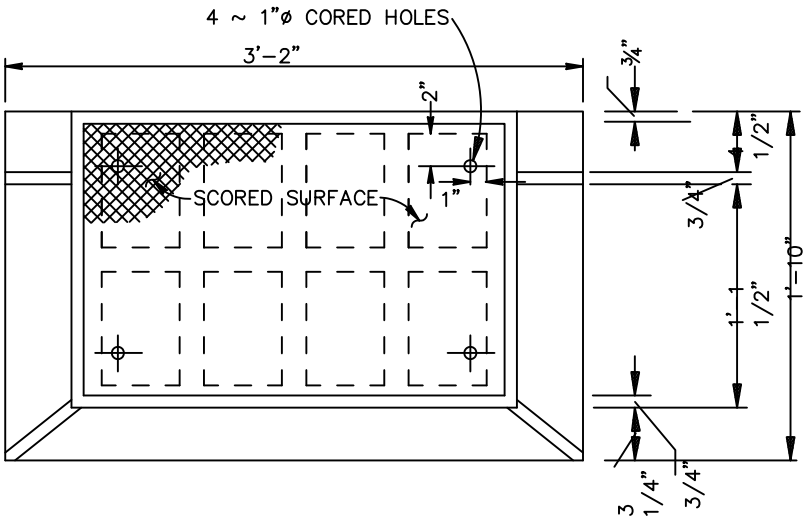

PLAN OF PLATE AND FRAME

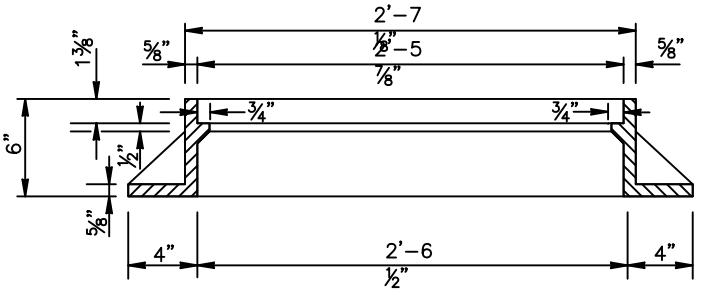

LONG SECTION OF FRAME

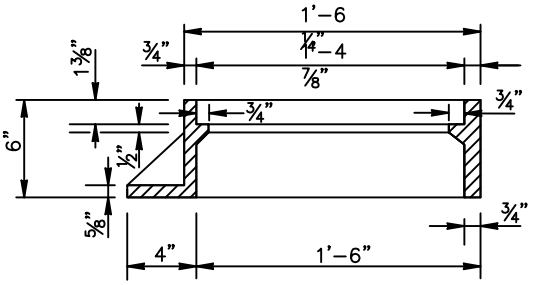

TRANS SECTION OF FRAME

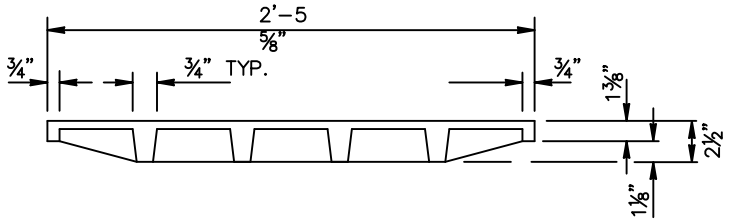

LONG SECTION OF PLATE

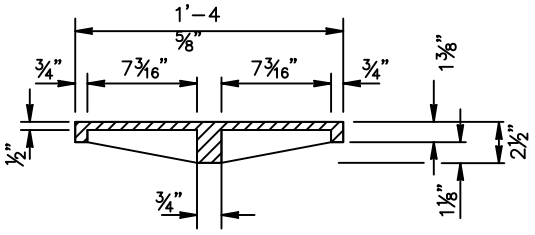

TRANS SECTION OF PLATE

FRAME: VULCAN MODEL V-4241 (2 REQ'D)
PLATE: VULCAN MODEL V-4240-2 (2 REQ'D)

NOT TO SCALE

CITY OF TOMBALL
ENGINEERING & PLANNING DEPARTMENT

CAST IRON PLATE & FRAME FOR TYPE "B" INLETS

APPROVED BY COT:

ENGINEERING & PLANNING DEPARTMENT
EFFECTIVE JULY 1, 2010

SHEET 001 OF 001 | DWG NO: COT STM-19

CAD FILE PATH:

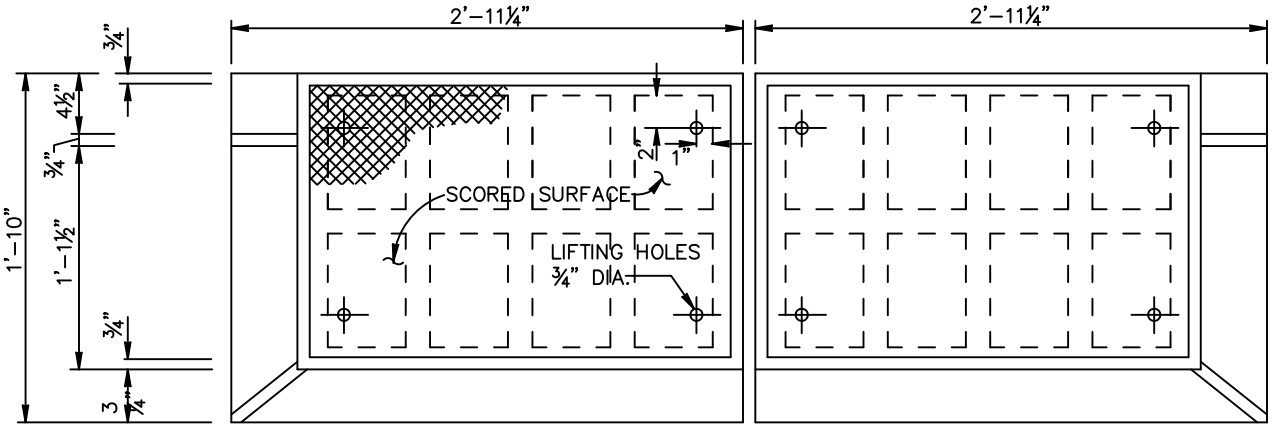

PLAN OF PLATE AND FRAME

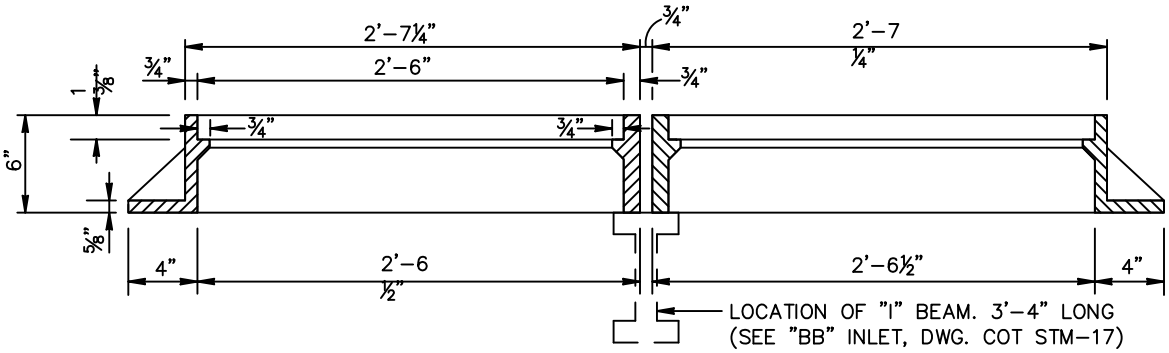

LONG SECTION OF FRAME

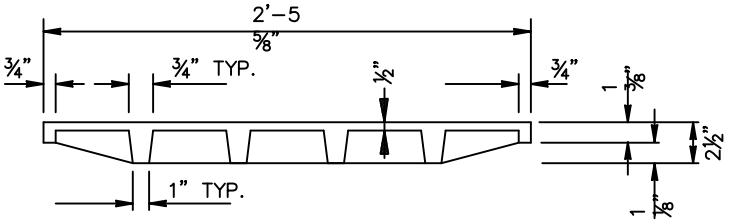

LONG SECTION

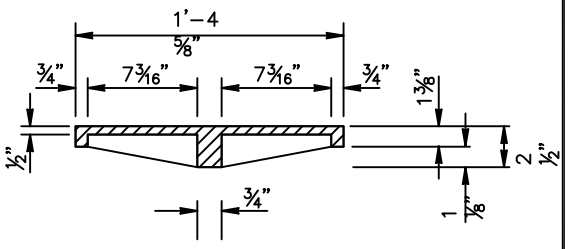

TRANS SECTION

PLATE

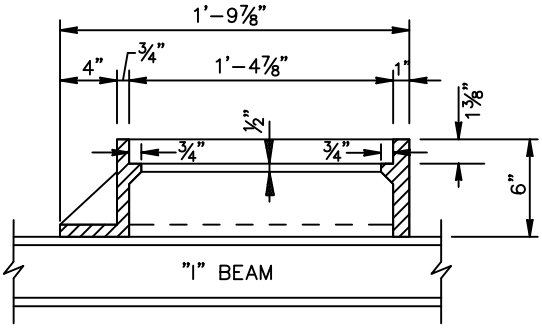

FRAME TRANS SECTION

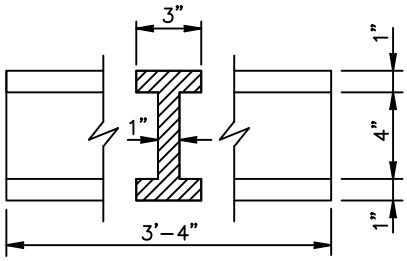

"I" BEAM
(CAST IRON)

NOT TO SCALE

FRAME: VULCAN MODEL V-4242L & V-4242R
PLATE: VULCAN MODEL V 4242-2
I-BEAM: VULCAN MODEL V 4881

CITY OF TOMBALL
ENGINEERING & PLANNING DEPARTMENT

CAST IRON PLATE, FRAME, & "I" BEAM FOR TYPE "B-B" INLET

APPROVED BY COT:

ENGINEERING & PLANNING DEPARTMENT
EFFECTIVE JULY 1, 2010

SHEET 001 OF 001 | DWG NO: COT STM-20

CAD FILE PATH:

CAD FILE PATH:

NOTE:
TYPE "C–2" PROVIDE A CENTER 6"x6" COLUMNS IN THE CURB LINE BETWEEN ALL EXTENSIONS

GENERAL NOTE

TYPE "C" INLET WITH ONE EXTENSION (5'–0" LONG)
TYPE "C–1" INLET WITH DOUBLE EXTENSION (10'–0" LONG)
TYPE "C–2" INLET WITH ONE EXTENSION ON EACH SIDE
TYPE "C–3" INLET WITH NO EXTENSION

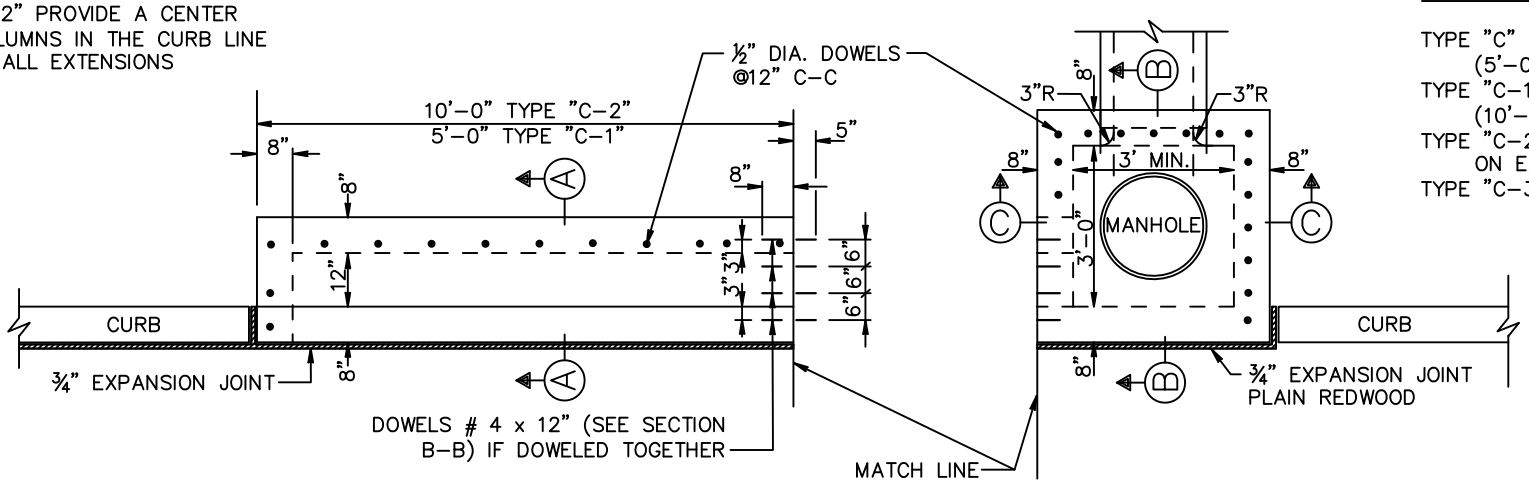

EXTENSION

PLAN

INLET TYPE C

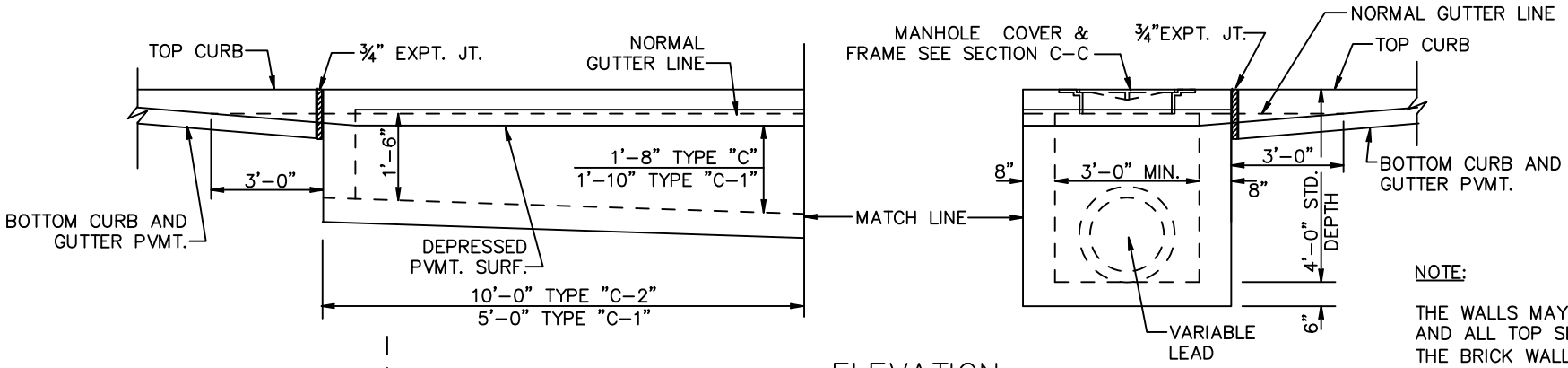

ELEVATION

NOTE:

THE WALLS MAY BE BUILT WITH BRICK AND ALL TOP SLABS DOWELED INTO THE BRICK WALLS WITH # 4 X 8" @ 12

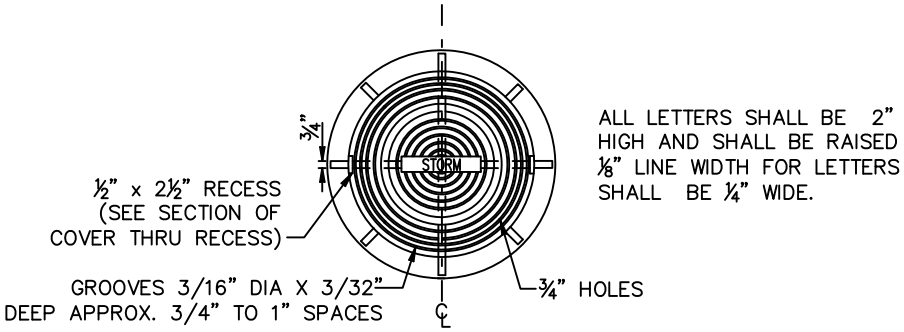

MANHOLE COVER PLAN

(FRAME: VULCAN MODEL V1851)
(COVER: VULCAN MODEL V1849)

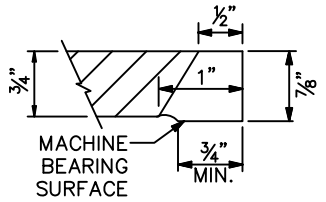

SECTION OF COVER THRU RECESS

NOT TO SCALE

CITY OF TOMBALL
ENGINEERING & PLANNING DEPARTMENT

TYPE "C", "C–1" "C–2" & "C–3" INLETS CONSTRUCTION DETAILS

APPROVED BY COT:

ENGINEERING & PLANNING DEPARTMENT
EFFECTIVE JULY 1, 2010

SHEET 1 OF 2 | DWG NO: COT STM–21

CAD FILE PATH:

WALLS TO BE 6" REINF. CONC.
OR MAY BE MADE OF BRICK WITH
8" WALL, IF SO USE STRAIGHT
WALL IN BACK WITH 6" REINF.
CONC SLAB TOP

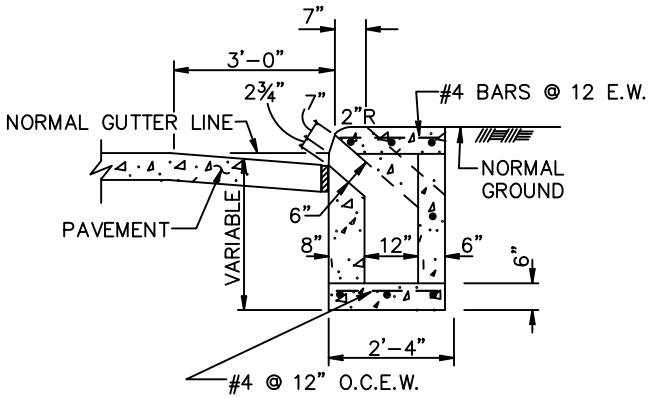

SECTION A-A

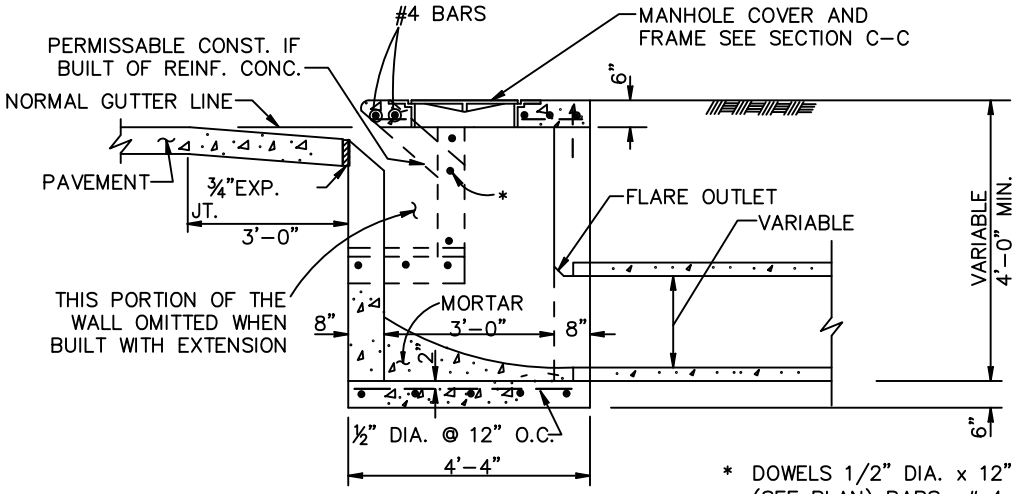

* DOWELS 1/2" DIA. x 12"
(SEE PLAN) BARS # 4 BARS
6" O C WHEN DOWELED

SECTION B-B

NOTE:

THE WALLS MAY BE BUILT WITH BRICK
AND ALL TOP SLABS DOWELED INTO
THE BRICK WALLS WITH # 4 X 8" @ 12

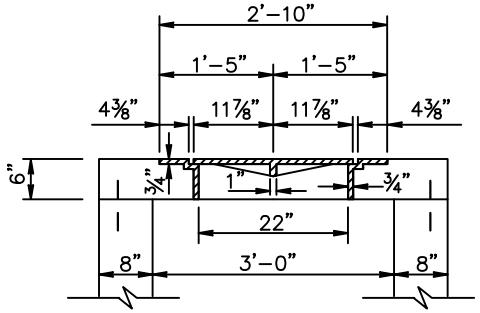

SECTION C-C

NOT TO SCALE

CITY OF TOMBALL
ENGINEERING & PLANNING DEPARTMENT

TYPE "C", "C-1" "C-2" & "C-3" INLETS CONSTRUCTION DETAILS

APPROVED BY COT:

ENGINEERING & PLANNING DEPARTMENT
EFFECTIVE JULY 1, 2010

SHEET 2 OF 2 | DWG NO: COT STM-21

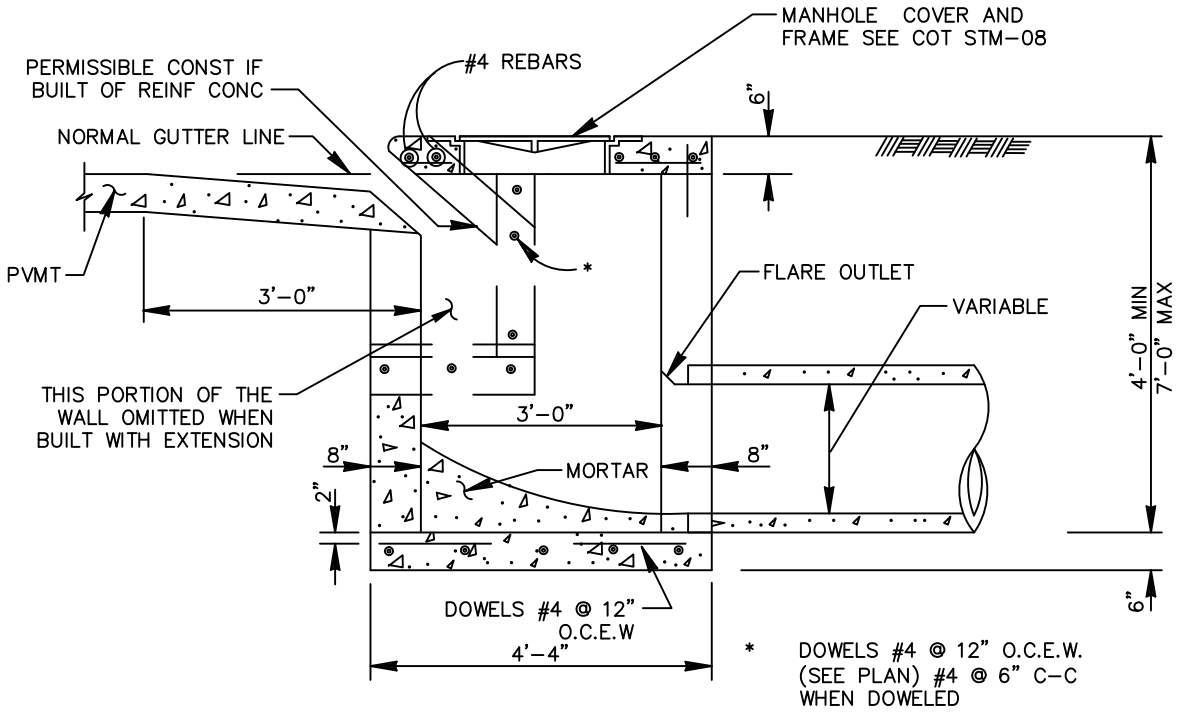

SECTION B

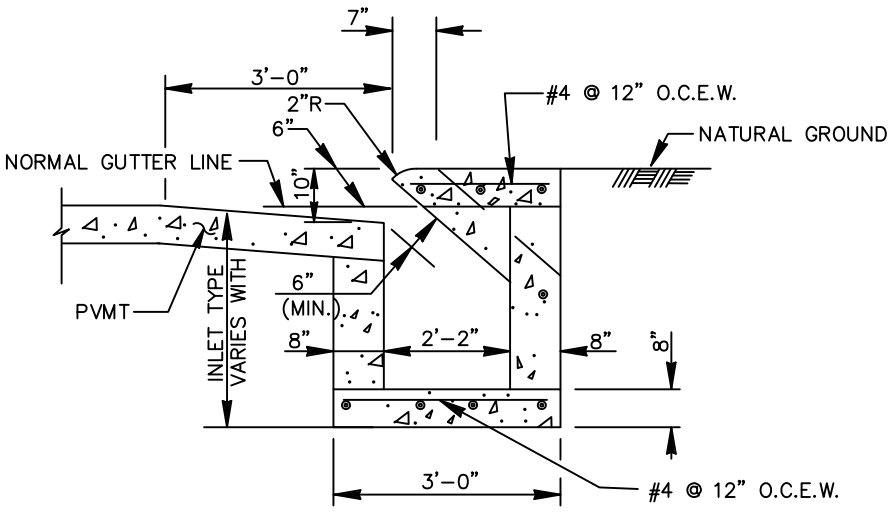

SECTION A

TYPE "C" INLET

NOT TO SCALE

CITY OF TOMBALL
ENGINEERING & PLANNING DEPARTMENT

PRECAST TYPE "C"
INLET
CONSTRUCTION DETAILS

APPROVED BY COT:

ENGINEERING & PLANNING DEPARTMENT
EFFECTIVE JULY 1, 2010

SHEET 001 OF 001 | DWG NO: COT STM-22

REFER TO:

1. GENERAL NOTES, C.S.S & CONCRETE NOTES.
2. STORM SEWER NOTES

CAD FILE PATH:

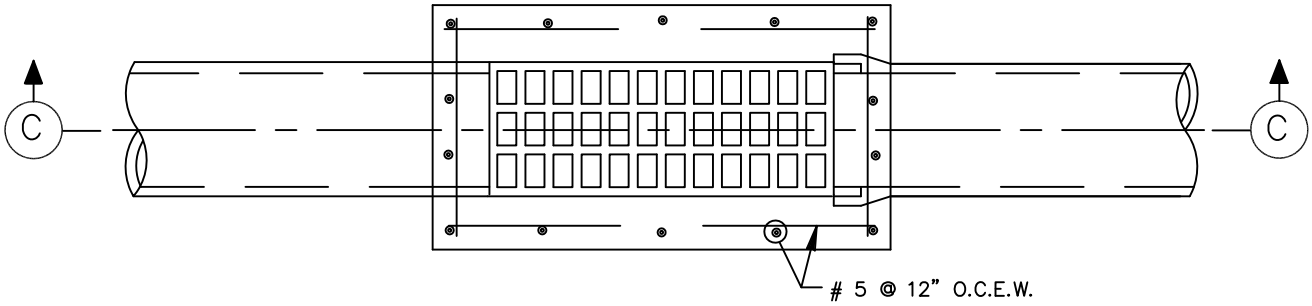

PLAN

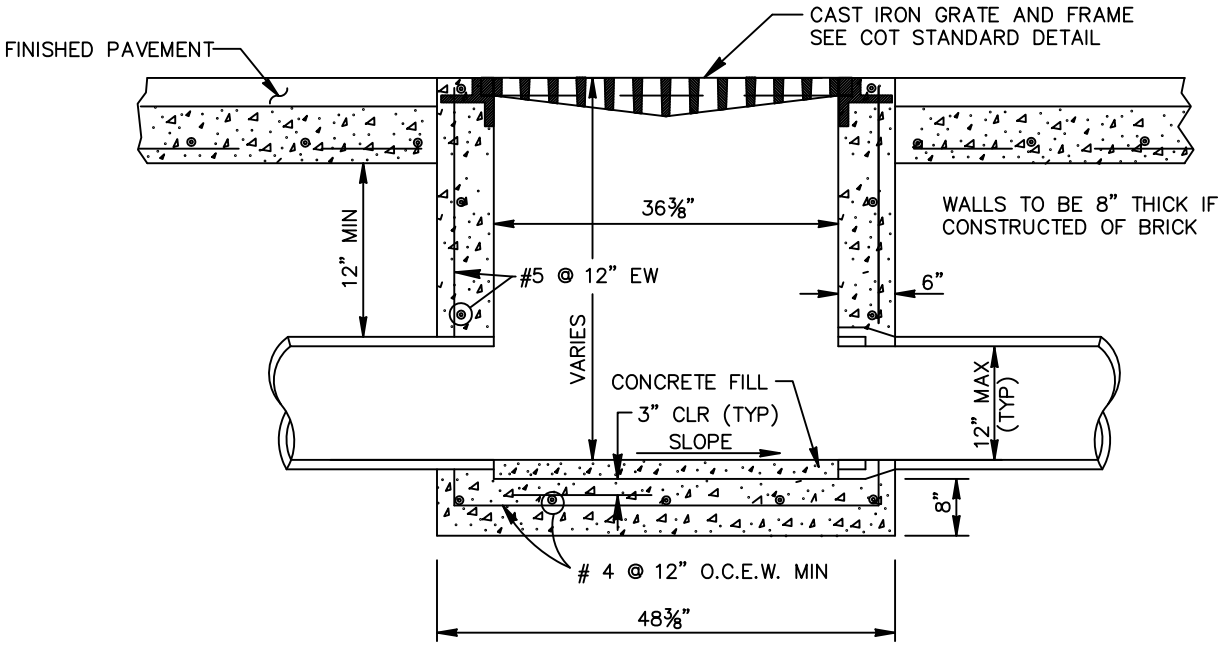

SECTION C

TYPE "D" INLET

NOT TO SCALE

CITY OF TOMBALL
ENGINEERING & PLANNING DEPARTMENT

TYPE "D"
INLET
CONSTRUCTION DETAILS

APPROVED BY COT:

ENGINEERING & PLANNING DEPARTMENT
EFFECTIVE JULY 1, 2010

SHEET 001 OF 001 | DWG NO: COT STM-23

CAD FILE PATH:

TYPE "E" INLET

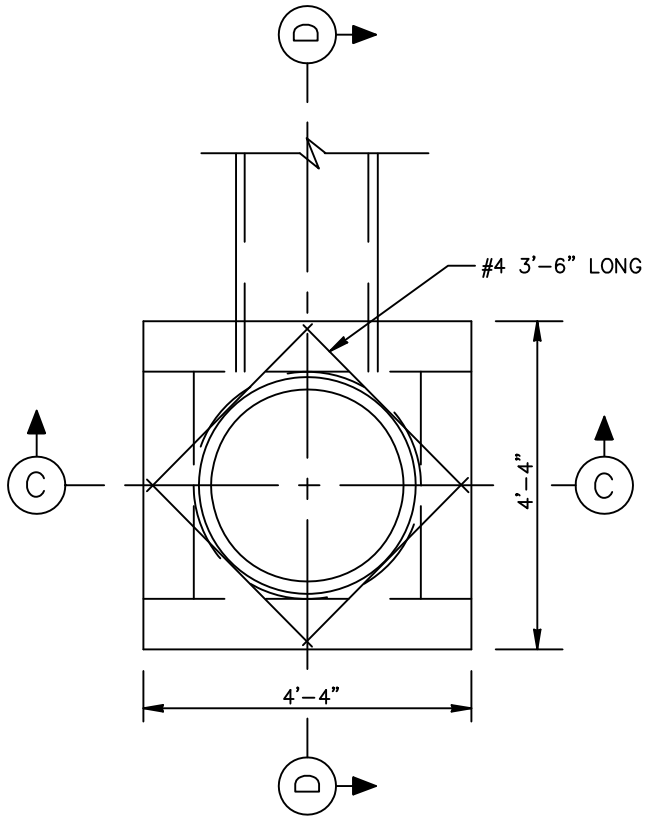

PLAN

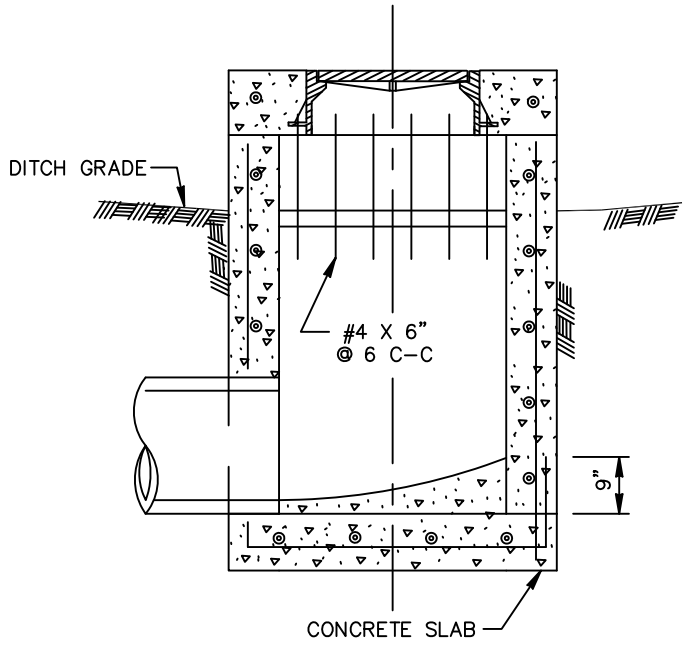

SECTION D

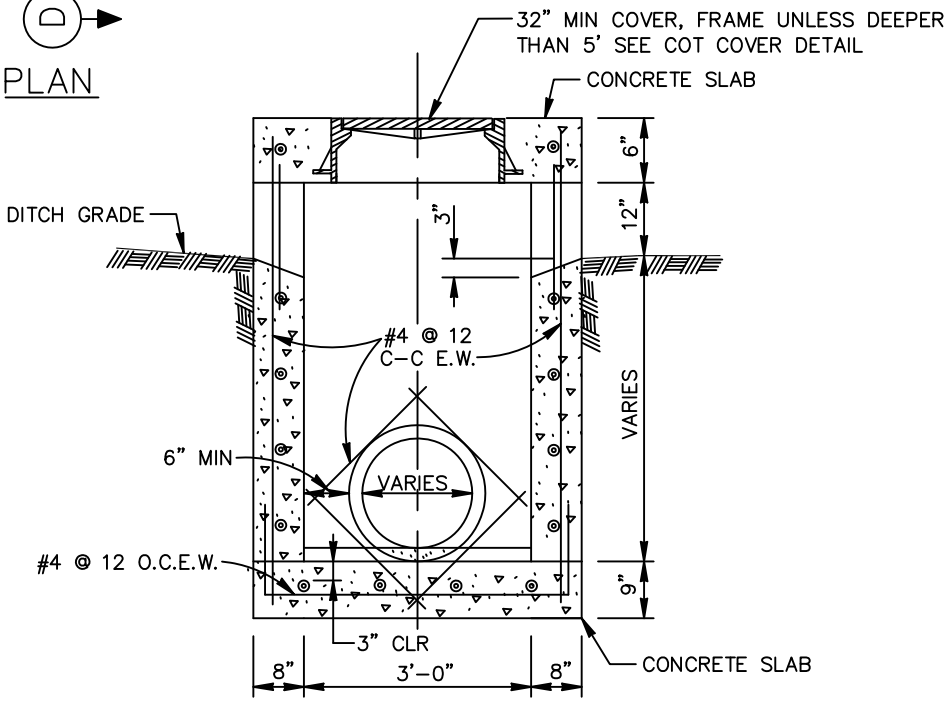

SECTION C

NOTE:
8" BRICK WALLS MAY BE CONSTRUCTED IN LIEU OF 8" CONCRETE WALLS SHOWN.

NOT TO SCALE

CITY OF TOMBALL
ENGINEERING & PLANNING DEPARTMENT

TYPE "E"
INLET
CONSTRUCTION DETAILS

APPROVED BY COT:

ENGINEERING & PLANNING DEPARTMENT
EFFECTIVE JULY 1, 2010

SHEET 001 OF 001 | DWG NO: COT STM-24

CAD FILE PATH:

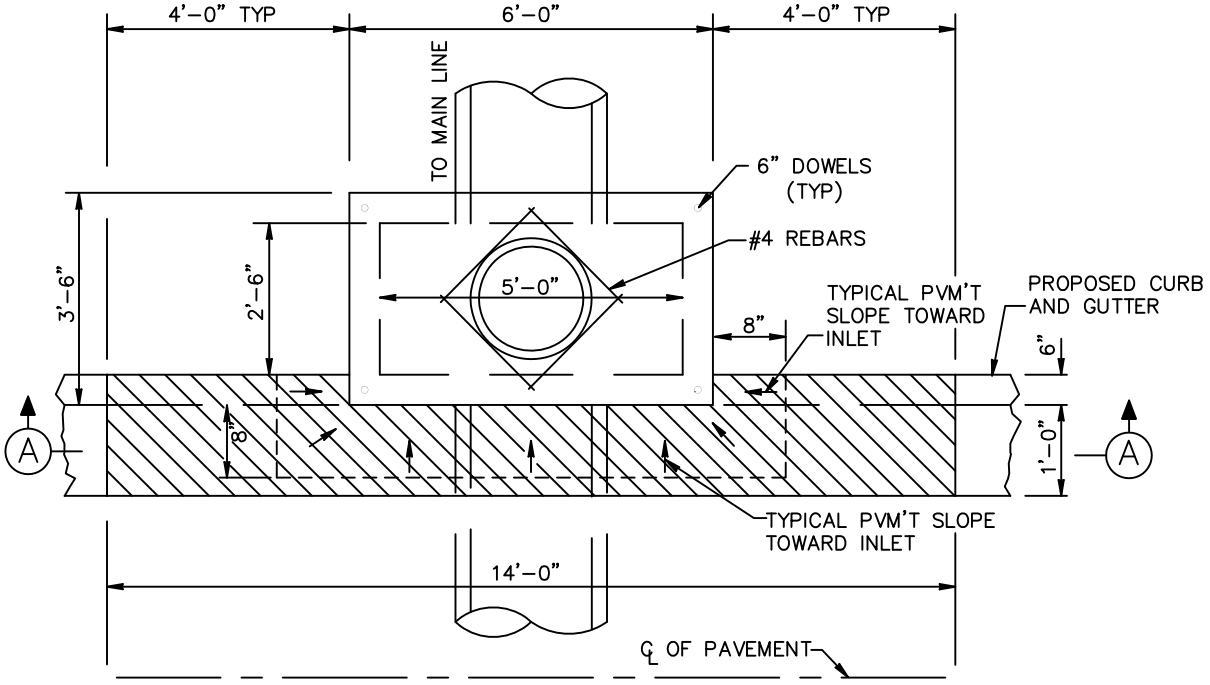

PLAN

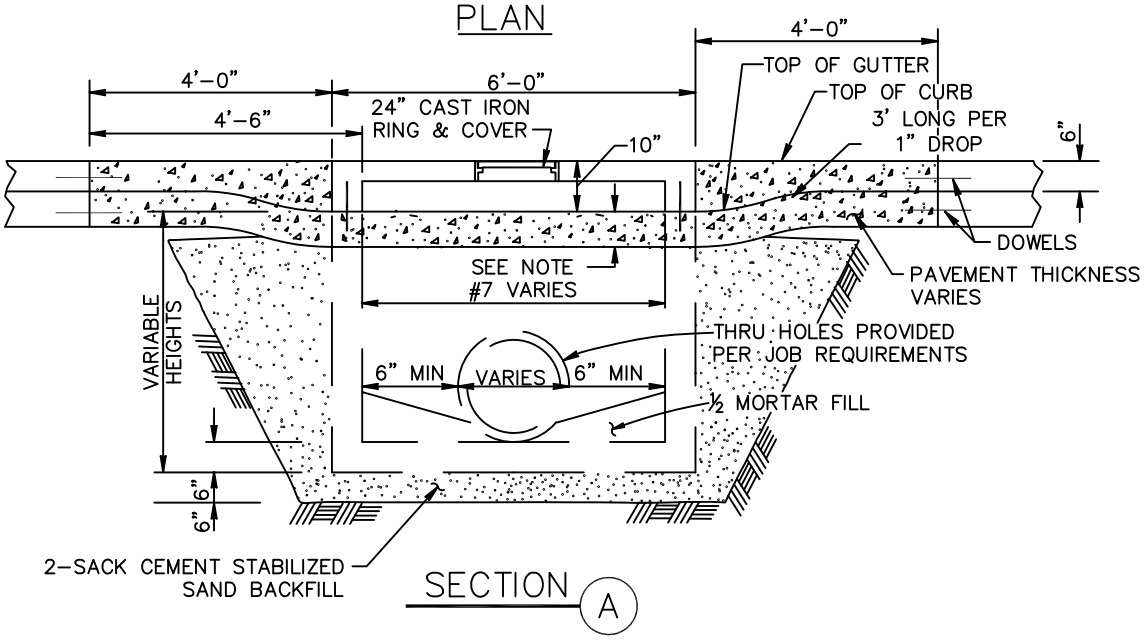

SECTION A

NOTES:

1. INLET WALLS MAY BE EXTENDED USING PRECAST RISER SECTION.
2. INLET TOPS MUST BE SECURED TO THE INLET WALL USING #6 DOWELS DRILLED AND GROUTED A MINIMUM DEPTH OF 5" INTO THE INLET WALL.
3. INLET BACKFILL SHALL BE CEMENT STABILIZED SAND TO THE TOP OF INLET FIRST STAGE.
4. GRADE 60 REINFORCED. #4 STEEL REBAR TO CONFORM TO ASTM A615 ON REQUIRED CENTERS OR EQUAL.
5. PRECAST INLET MUST BE CONSTRUCTED TO SPECIFICATIONS REQUIRED BY APPROVED DRAWINGS. (SEE GENERAL NOTES).
6. TOPS POURED-IN-PLACE REQUIRE #4 REBAR @ 12" C-C EACH WAY, 3,000 PSI CONCRETE MINIMUM AND 3" THICK MINIMUM.
7. PAVEMENT DEPTH AT INLET SHALL BE EQUAL TO OR GREATER THAN REQUIRED PAVEMENT DEPTH.

NOT TO SCALE

TYPE "H-2" INLET

CITY OF TOMBALL
ENGINEERING & PLANNING DEPARTMENT

TYPE "H-2"
INLET
CONSTRUCTION DETAILS

APPROVED BY COT:

ENGINEERING & PLANNING DEPARTMENT
EFFECTIVE JULY 1, 2010

SHEET 001 OF 001 | DWG NO: COT STM-25

CAD FILE PATH:

CAD FILE PATH:

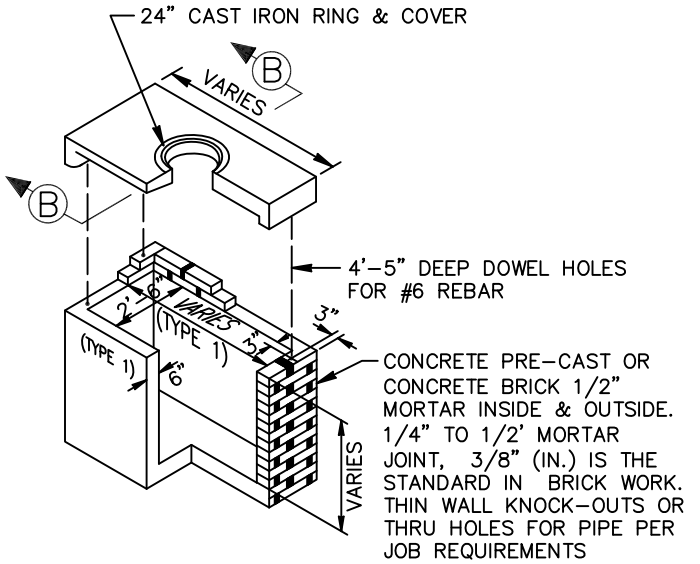

NOTE:
REFER TO INSTALLATION FOR
TYPE H-2 5'-0" CURB INLET
ON PAVING DETAIL SHEET

TYPE "H-2" PRECAST INLET

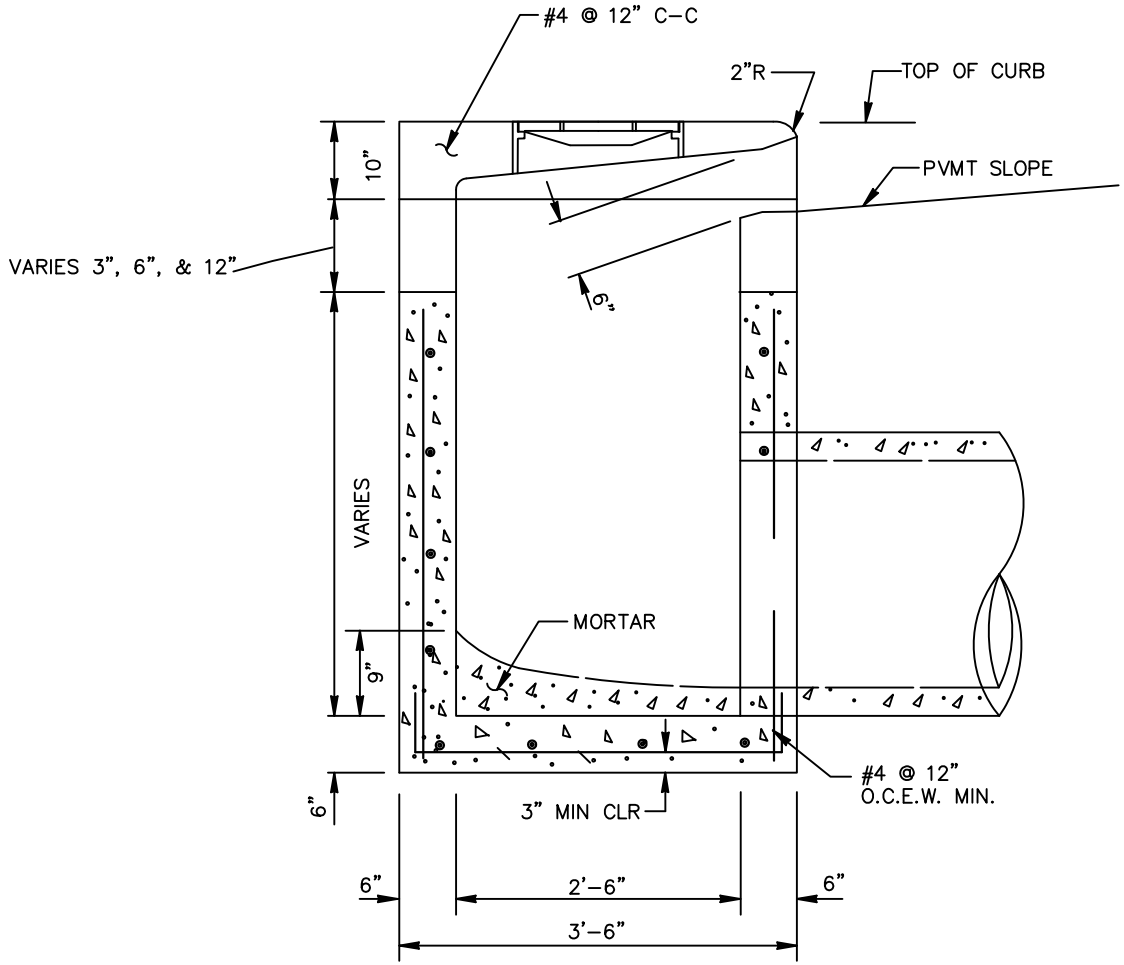

SECTION B

NOT TO SCALE

REFER TO:

1. GENERAL NOTES
2. SEE C.S.S., PAVEMENT NOTES

CITY OF TOMBALL
ENGINEERING & PLANNING DEPARTMENT

PRECAST "H-2"
INLET
CONSTRUCTION DETAILS

APPROVED BY COT:

ENGINEERING & PLANNING DEPARTMENT
EFFECTIVE JULY 1, 2010

SHEET 001 OF 001 | DWG NO: COT STM-26

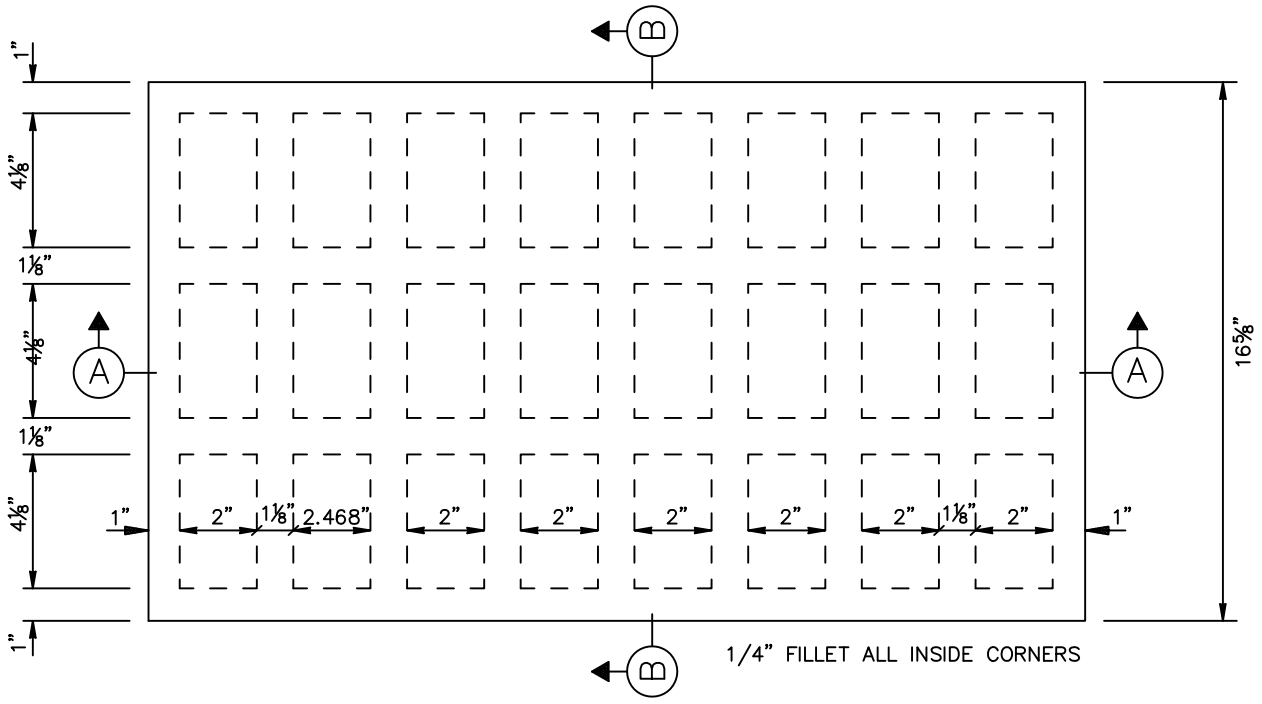

PLAN

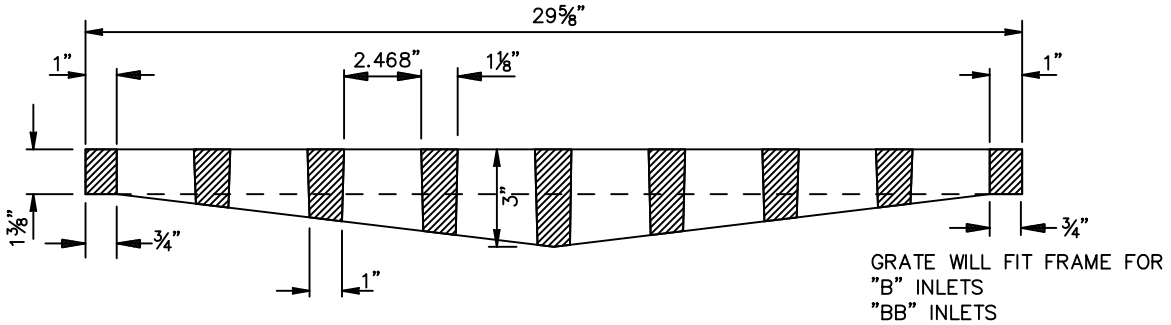

SECTION A–A

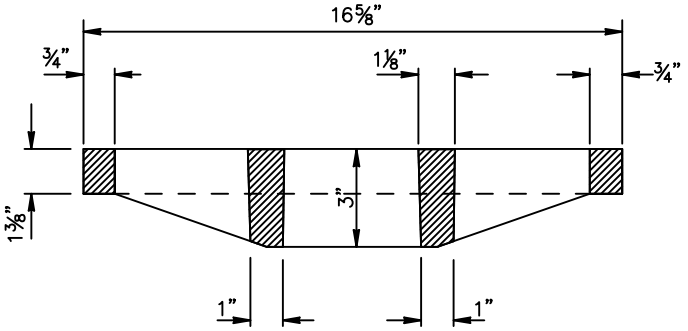

SECTION B–B

VULCAN MODEL V–4241–1

NOT TO SCALE

CITY OF TOMBALL
ENGINEERING & PLANNING DEPARTMENT

CAST IRON INLET GRATE CONSTRUCTION DETAILS

APPROVED BY COT:

ENGINEERING & PLANNING DEPARTMENT
EFFECTIVE JULY 1, 2010

SHEET 001 OF 001 | DWG NO: COT STM–27

CAD FILE PATH:

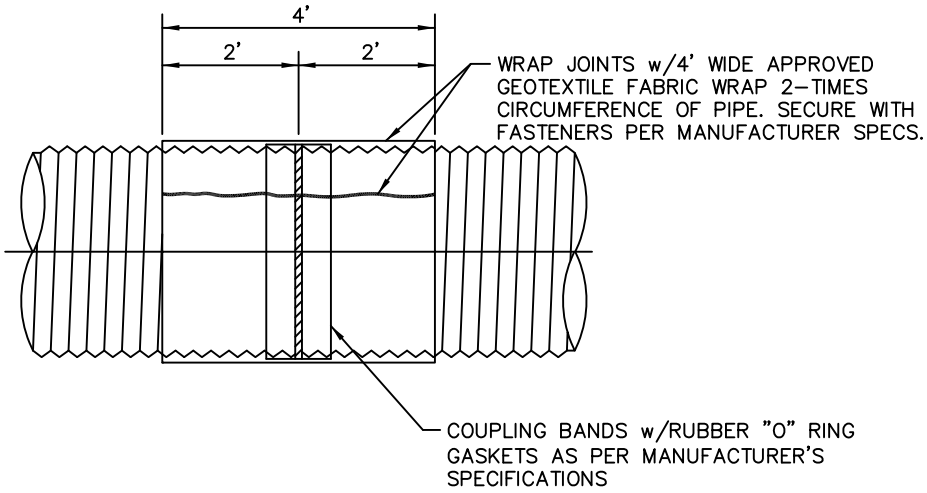

NOTES:

1. ANY PIPE DEFLECTED MORE THAN 2% SHALL BE REJECTED AND REPLACED AT CONTRACTOR'S EXPENSE.
2. INSTALLATION SHALL BE AS PER MANUFACTURER'S RECOMMENDATIONS INCLUDING ITEMS AS DETAILED IN INSTALLATION MANUAL FOR CORRUGATED STEEL DRAINAGE STRUCTURES.

STORM SEWER JOINT WRAP DETAIL

NOT TO SCALE

CITY OF TOMBALL
ENGINEERING & PLANNING DEPARTMENT

STORM SEWER
JOINT WRAP
CONSTRUCTION DETAIL

APPROVED BY COT:

ENGINEERING & PLANNING DEPARTMENT
EFFECTIVE JULY 1, 2010

SHEET 001 OF 001 | DWG NO: COT STM-28

CAD FILE PATH:

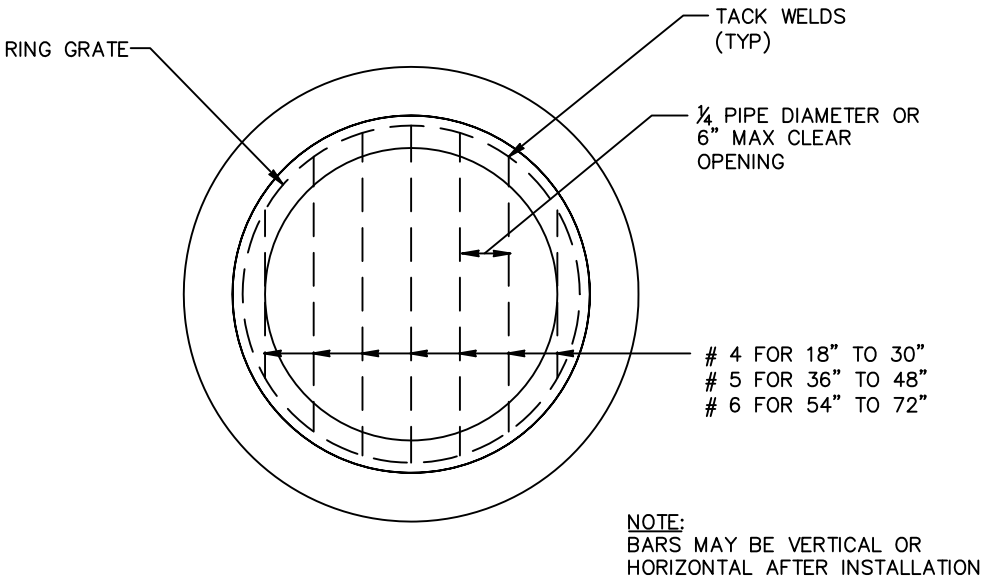

END VIEW

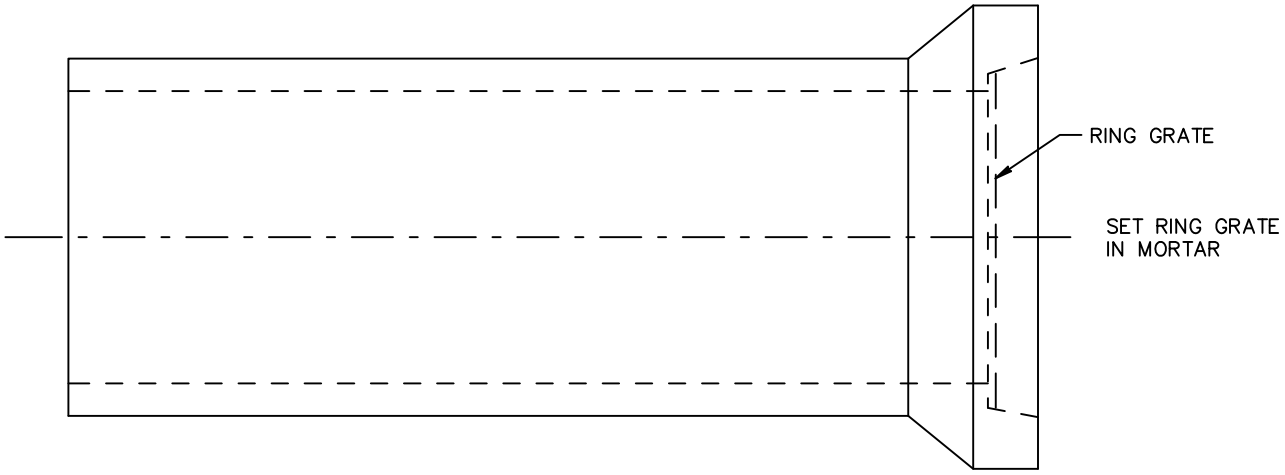

SIDE VIEW

NOT TO SCALE

CITY OF TOMBALL
ENGINEERING & PLANNING DEPARTMENT

RING GRATE FOR OPEN END OF 18" TO 72" STUBS TO DITCH

APPROVED BY COT:

ENGINEERING & PLANNING DEPARTMENT
EFFECTIVE JULY 1, 2010

SHEET 001 OF 001 | DWG NO: COT STM-29

CAD FILE PATH:

CAD FILE PATH:

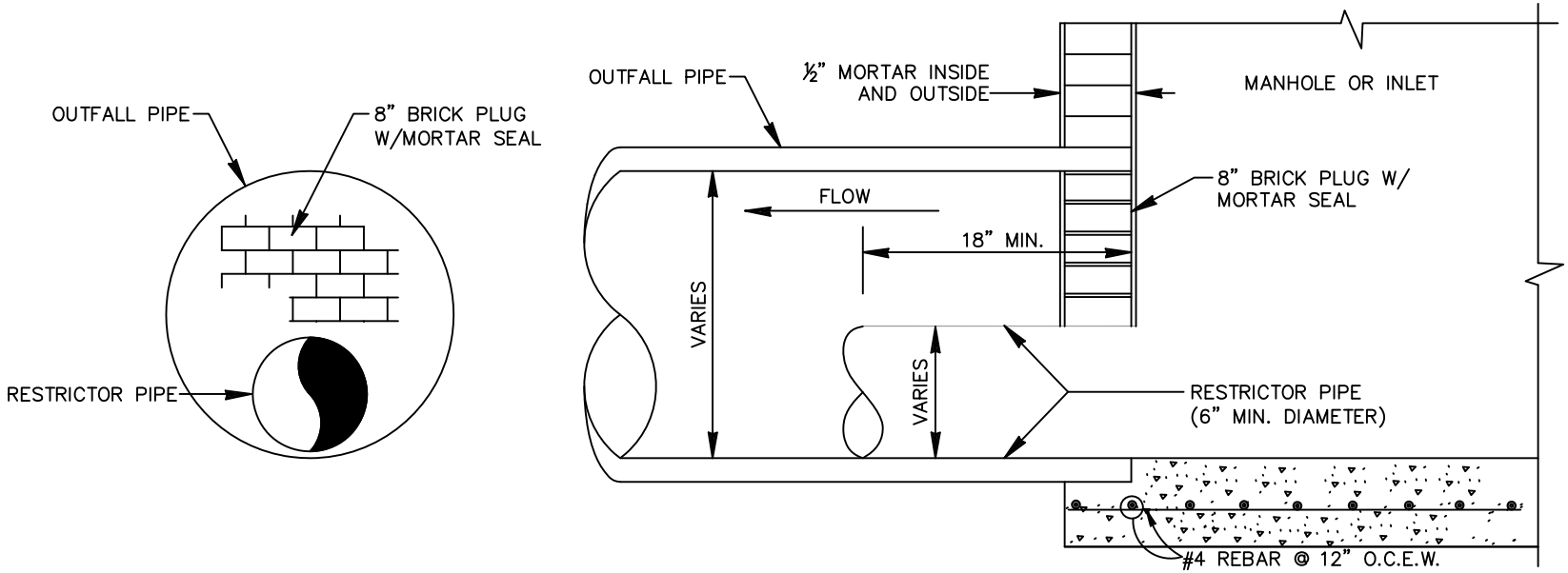

STORM SEWER CHOKE OUTFALL RESTRICTOR DETAIL

NOT TO SCALE

REFER TO:

1. GENERAL NOTES
2. STORM SEWER NOTES

CITY OF TOMBALL
ENGINEERING & PLANNING DEPARTMENT

STORM SEWER CHOKE RESTRICTOR CONSTRUCTION DETAILS

APPROVED BY COT:

ENGINEERING & PLANNING DEPARTMENT
EFFECTIVE JULY 1, 2010

SHEET 001 OF 001 | DWG NO: COT STM-30

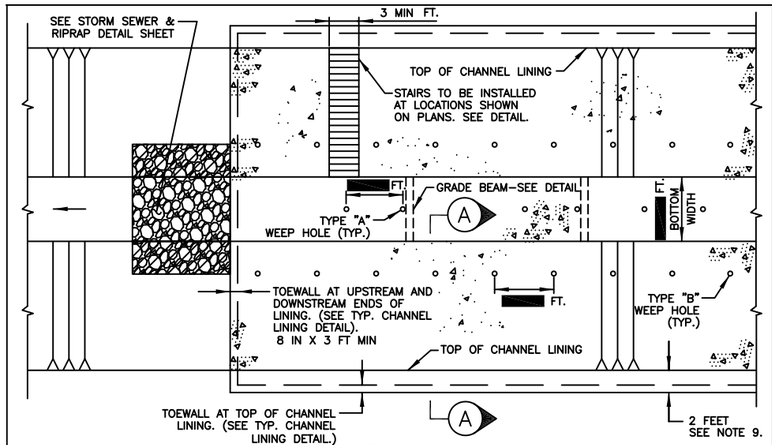

PLAN

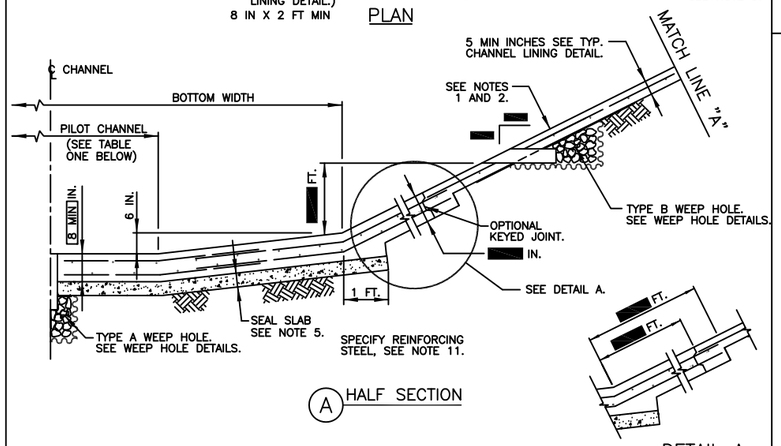

(A) HALF SECTION

DETAIL A

TYPICAL TRAPEZOIDAL CHANNEL LINING

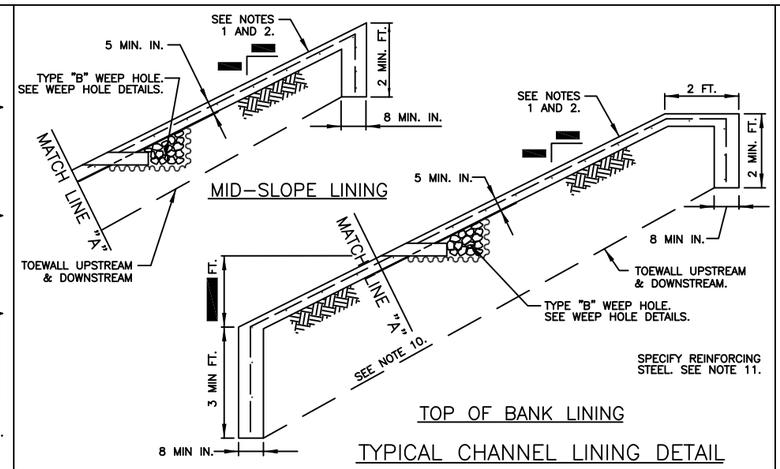

TOP OF BANK LINING

TYPICAL CHANNEL LINING DETAIL

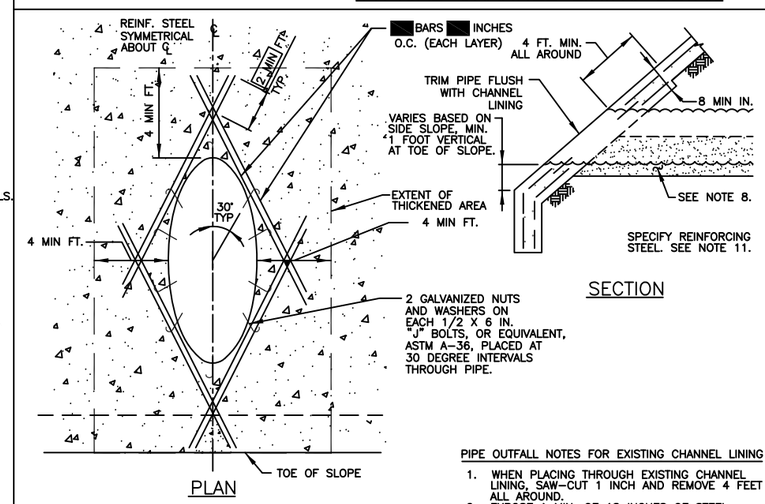

SECTION

PLAN

SPECIFY REINFORCING STEEL. SEE NOTE 11.

PIPE OUTFALL DETAILS

(FOR OUTFALLS 24-42 INCH DIA.)

PIPE OUTFALL NOTES FOR EXISTING CHANNEL LINING

1. WHEN PLACING THROUGH EXISTING CHANNEL LINING, SAW-CUT 1 INCH AND REMOVE 4 FEET ALL AROUND.
2. EXPOSE A MIN. OF 18 INCHES OF STEEL.

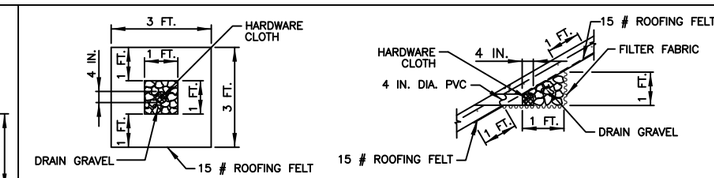

PLAN

SECTION

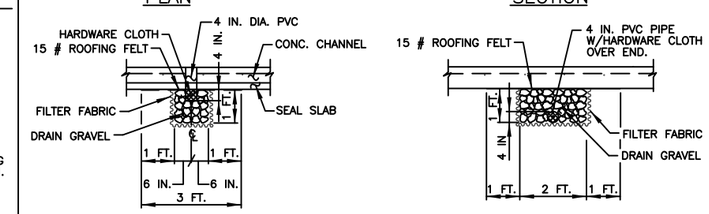

SECTION

SECTION

TYPE "A" WEEP HOLE

TYPE "B" WEEP HOLE

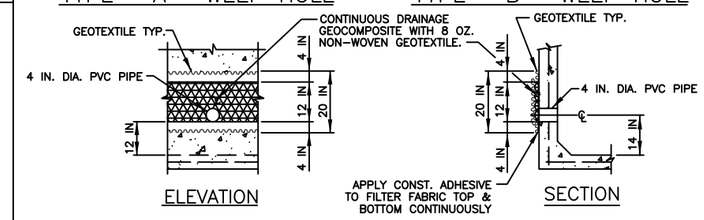

ELEVATION

SECTION

TYPE "C" WEEP HOLE

WEEP HOLE NOTES:

1. MATERIALS:
   a. PIPE: 4 INCH DIA. SCH. 40 PVC
   b. DRAIN GRAVEL:

SIEVE SIZE	% FINER
1 IN	100
3/4 IN	70 – 100
3/8 IN	20 – 90
NO. 4	0 – 60
NO. 8	0

   c. HARDWARE CLOTH: MIN. OPEN 1/8 IN, MAX. OPEN 1/4 IN
   d. FILTER FABRIC: NON-WOVEN GEOTEXTILE

MIN. AOS	SIEVE NO.	100 MIN
MAX. AOS	SIEVE NO.	70 MAX
WEIGHT	OZ/SY	6 OZ. MIN

2. CUT WEEP HOLE PIPE FLUSH WITH CONCRETE SURFACE.
3. TYPE "A" AND "C" WEEP HOLES FOR TYPICAL RECTANGULAR CONCRETE CHANNEL LINING. TO BE STAGGERED.

WEEP HOLE DETAILS

GENERAL NOTES:

1. STRUCTURAL CONCRETE FOR CONCRETE CHANNEL LINING AND NONSTRUCTURAL CONCRETE FOR SEAL SLAB SHALL BE IN ACCORDANCE WITH SPECIFICATION SECTION NO. 03310-CONCRETE.
2. REINFORCING STEEL SHALL BE IN ACCORDANCE WITH SPECIFICATION SECTION NO. 03310-CONCRETE.
3. EXCAVATION AND BACKFILL FOR CONCRETE CHANNEL LINING SHALL BE IN ACCORDANCE WITH SPECIFICATION SECTION NO. 02316-STRUCTURAL EXCAVATING AND BACKFILLLING.
4. RIPRAP SHALL BE IN ACCORDANCE WITH SPECIFICATION SECTION NO. 02378-RIPRAP AND GRANULAR FILL.
5. A NON-REINFORCED 4 INCH MINIMUM NONSTRUCTURAL CONCRETE SEAL SLAB WILL BE REQUIRED BENEATH THE BOTTOM OF CONCRETE CHANNELS.
6. STRUCTURAL CONCRETE GRADE BEAMS SHALL BE INSTALLED TRANSVERSLEY AT 20 FOOT MAX. CENTERS ON CONCRETE LINED CHANNELS WITH BOTTOM WIDTHS EQUAL TO OR GREATER THAN 20 FEET.
7. JOINTS:
   A PLACE CONSTRUCTION AND/OR EXPANSION JOINT IN CONCRETE LOW-FLOW AND TRAPEZOIDAL BOTTOM SECTIONS AT 20 FOOT MIN., 60 FOOT MAX. SPACING CONTINUOUSLY THROUGH CHANNEL LINING.
   B. PLACE CONTROL JOINT ON SLOPES AT 20 FOOT SPACING.
8. CEMENT STABILIZED SAND SHALL BE PROVIDED AND PLACED IN ACCORDANCE WITH SPECIFICATION SECTION NO. 02321-CEMENT STABILIZED SAND.
9. DELETE 2 FT FLAT EDGE WHEN LINING IS BELOW TOP OF BANK. SEE MID-SLOPE LINING DETAIL.
10. UPSTREAM AND DOWNSTREAM TOE WALL 3 FOOT MIN. DEPTH AT BOTTOM OF SLOPE AND 8 INCHES THIICK.
11. #4 AT 12 INCH O.C. MINIMUM OR EQUIVALENT WELDED WIRE FABRIC.

THIS DETAIL SHEET HAS BEEN PREPARED FOR USE ON HCFCD PROJECTS OR PROJECTS TO BE MAINTAINED BY THE HCFCD WHEN COMPLETED BY OTHERS. AN ENGINEER WHO INCORPORATES THE DETAILS ON THIS SHEET BECOMES RESPONSIBLE FOR ITS USE IN THE END PRODUCT IN ACCORDANCE WITH RULE §137.33 (b) AND (c) OF THE TEXAS STATE BOARD OF REGISTRATION FOR PROFESSIONAL ENGINEERS.

P.E. SEAL AND SIGNATUARE

TABLE ONE	
BOTTOM WIDTH	PILOT CHANNEL WIDTH
BW < 12 FT	FLAT BOTTOM
BW = 12 FT – 20 FT	6 FT
BW > 20 FT	8 FT

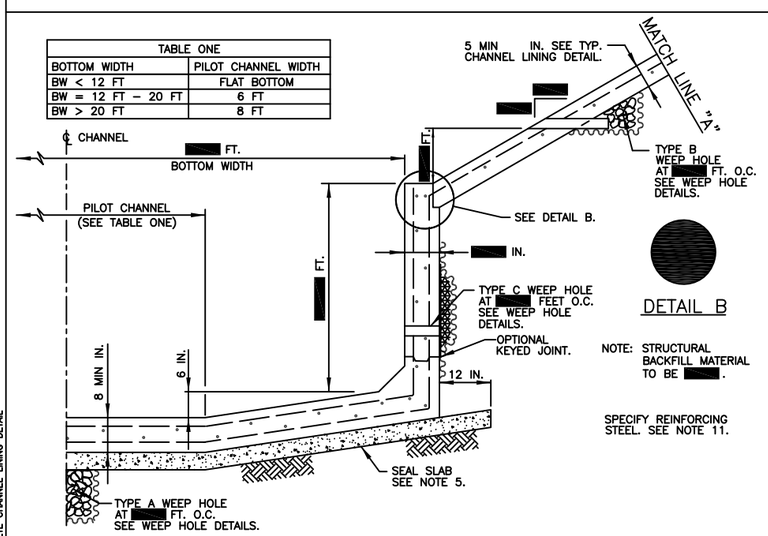

DETAIL B

NOTE: STRUCTURAL BACKFILL MATERIAL TO BE .

SPECIFY REINFORCING STEEL. SEE NOTE 11.

TYPICAL RECTANGULAR CONCRETE CHANNEL LINING HALF SECTION

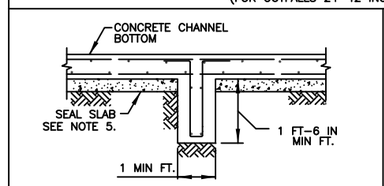

SPECIFY REINFORCING STEEL. SEE NOTE 11.

GRADE BEAM DETAIL

(SEE NOTE 6)

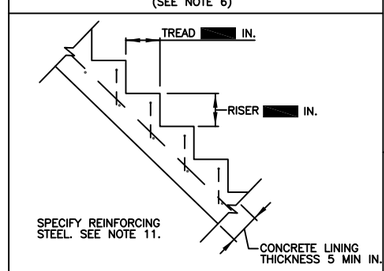

SPECIFY REINFORCING STEEL. SEE NOTE 11.

STAIR DETAIL

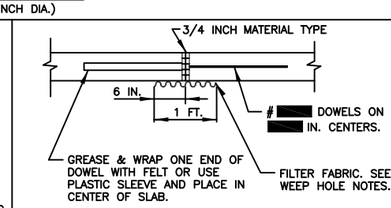

EXPANSION JOINT

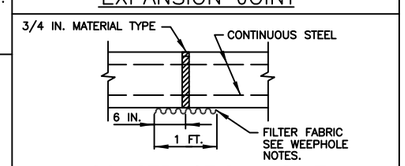

CONSTRUCTION JOINT

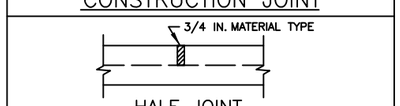

HALF JOINT

(SLOPES ONLY)

CONTROL JOINT

REV	DESCRIPTION	DATE	APPR

PROJECT ID#

PROJECT TITLE

CONCRETE CHANNEL LINING DETAILS

PREPARED: CHECKED: APPROVED:

COMPANY INFORMATION AND LOGO GOES HERE

Harris County Flood Control District

9900 Northwest Freeway
Houston, Texas 77092

DATE: 08-31-05
SCALE: NTS

SHEET NUMBER
22 OF 23

STD\CONCRETE CHANNEL LINING DETAIL

COT STM-31

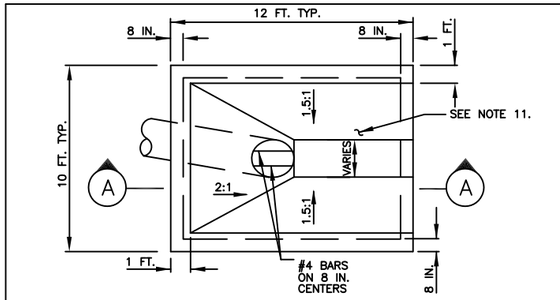

PLAN

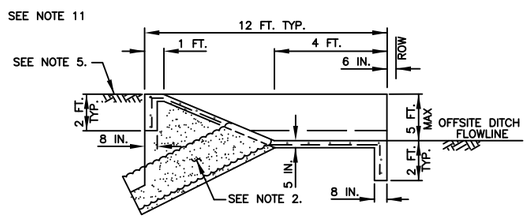

A SECTION

TYPICAL OFFSITE DITCH INTERCEPTOR STRUCTURE

(42 INCH MAX.)

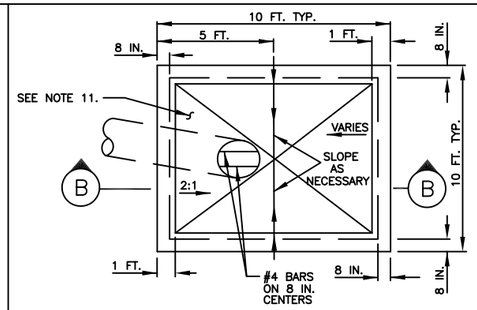

PLAN

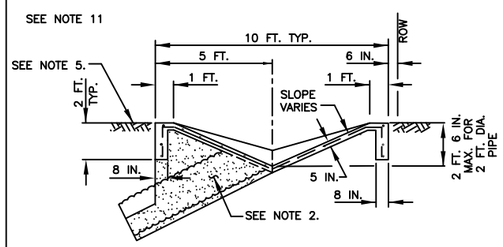

B SECTION

TYPICAL BACKSLOPE INTERCEPTOR STRUCTURE

(24 INCH & 30 INCH ONLY)

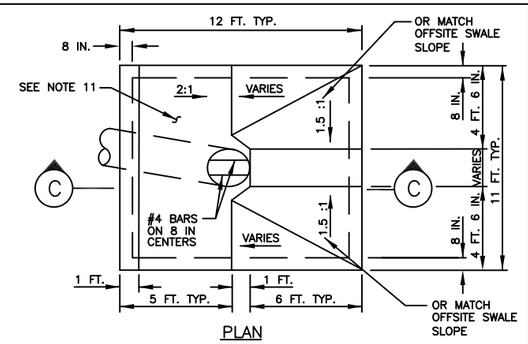

PLAN

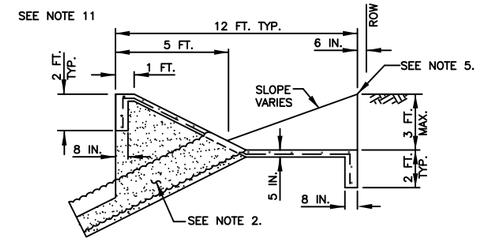

C SECTION

COMBINATION BACKSLOPE & OFFSITE DITCH INTERCEPTOR STRUCTURE

(42 INCH MAX.)

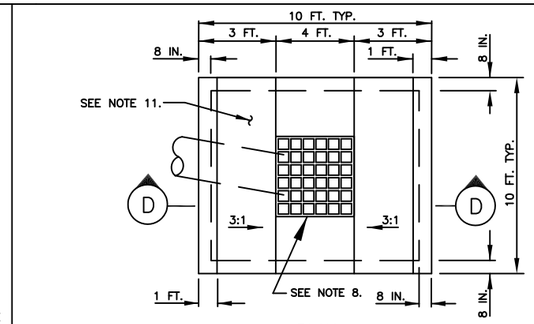

PLAN

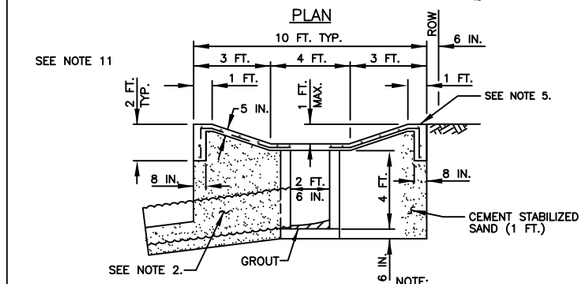

D SECTION

NOTE:
WALLS AND FLOOR SHALL BE 6 IN. REINFORCED STRUCTURAL CONCRETE OR WALLS MAY BE 8 IN. CONCRETE BRICK CONSTRUCTION

URBAN BACKSLOPE INTERCEPTOR STRUCTURE

(24 INCH ONLY)

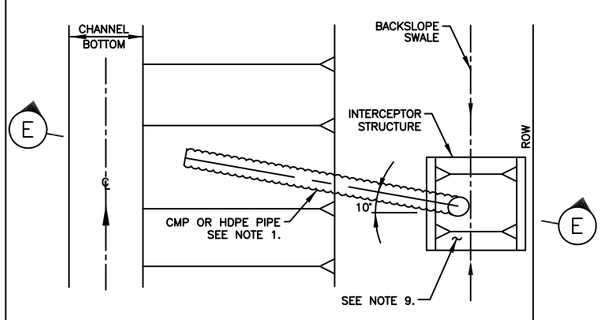

PLAN

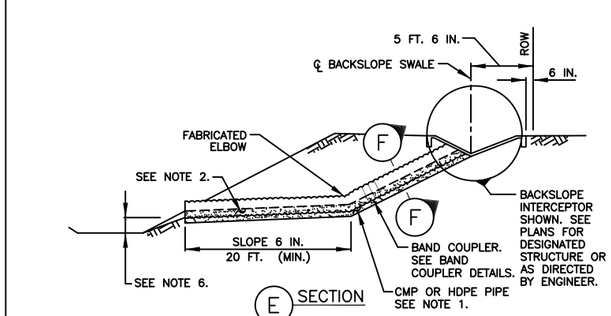

E SECTION

TYPICAL INTERCEPTOR OUTFALL STRUCTURE LAYOUT

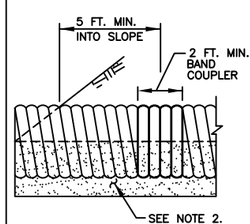

CMP BAND COUPLER DETAIL

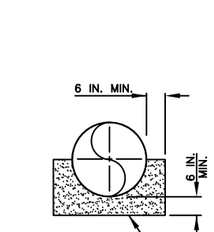

F SECTION

BEDDING CMP DETAIL

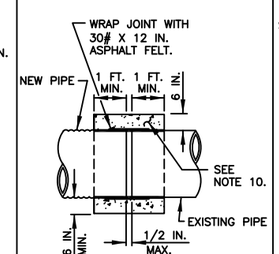

CONCRETE COLLAR DETAIL

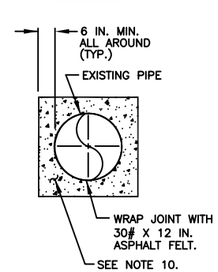

BEDDING CONCRETE PIPE DETAIL

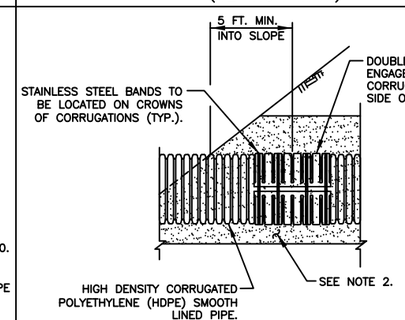

HDPE PIPE BAND COUPLER DETAIL

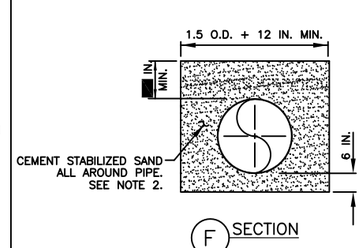

F SECTION

BEDDING HDPE PIPE DETAIL

INTERCEPTOR STRUCTURE DETAIL NOTES:

1. INTERCEPTOR OUTFALL PIPES WITHIN THE HCFCD RIGHT-OF-WAY SHALL BE CMP OR HDPE PIPE IN ACCORDANCE WITH SPECIFICATION SECTION 02642- CORRUGATED METAL PIPE, HIGH DENSITY POLYETHYLENE (HDPE) PIPE IN ACCORDANCE WITH SPECIFICATION SECTION 2505-HIGH DENSITY POLYETHYLENE, OR APPROVED EQUAL.
2. PROVIDE AND PLACE CEMENT STABILIZED SAND IN ACCORDANCE WITH SPECIFICATION SECTION 02321-CEMENT STABILIZED SAND AND SECTION 02316 - STRUCTURAL EXCAVATING.
3. EXCAVATION, FILL AND BACKFILL FOR STORM SEWER OUTFALLS SHALL BE IN ACCORDANCE WITH SPECIFICATION SECTION 02316-STRUCTURAL EXCAVATING AND BACKFILLING.
4. CONCRETE SHALL BE STRUCTURAL CONCRETE IN ACCORDANCE WITH SPECIFICATION SECTION 03310-CONCRETE.
5. INTERCEPTOR STRUCTURES:
   a. ADJUST LENGTH AND WIDTH IN FIELD AS NECESSARY.
   b. 2-FEET DEEP X 8-INCH WIDE TOE ALL AROUND THE STRUCTURE.
   c. STEEL REINFORCING-#4 BARS (GRADE 40) AT 12 INCHES ON CENTER EACH WAY.
   d. ANY INTERCEPTOR OUTFALL PIPE LARGER THAN MAXIMUM SIZE INDICATED REQUIRES A SEPARATE DETAIL.
   e. MATCH TOP OF CONCRETE WITH NATURAL GROUND.
6. SET FLOWLINE OF OUTFALL PIPES 1 FOOT ABOVE CHANNEL FLOWLINE OR 1 FOOT ABOVE NORMAL WATER SURFACE ELEVATION.
7. SEE CONCRETE CHANNEL LINING DETAIL SHEET FOR CMP OR HDPE OUTFALL DETAILS THROUGH CONCRETE CHANNEL LINING.
8. CONCRETE PAD AROUND TYPE "B" INLET: PAID FOR AS CONCRETE INTERCEPTOR STRUCTURE PER UNIT PRICE SCHEDULE. TYPE "B" INLET BOX, COH DWG. NO. 02632-02 WITH GRATE TOP, VULCAN FOUNDRY COMPANY, V-4880-1 OR APPROVED EQUAL, APPROX. 489 SQ.IN. OPENING.
9. BACKSLOPE SWALE AND INTERCEPTOR STRUCTURE ELEVATIONS AND LOCATIONS SHOWN ON THE PLANS ARE APPROXIMATE. FINAL ELEVATIONS AND LOCATIONS SHALL BE FIELD VERIFIED BY THE ENGINEER PRIOR TO INSTALLATION.
10. STRUCTURAL CONCRETE WITH #4 BARS (GRADE 40) 12 INCH O.C. EACH WAY - FOR COLLARS ONLY.
11. EPOXY CLEAN WATER CLEAR CHOICE LOGO BUTTON ON INTERCEPTORS. LOCATION TO BE DETERMINED BY THE ENGINEER.

THIS DETAIL SHEET HAS BEEN PREPARED FOR USE ON HCFCD PROJECTS OR PROJECTS TO BE MAINTAINED BY THE HCFCD WHEN COMPLETED BY OTHERS. AN ENGINEER WHO INCORPORATES THE DETAILS ON THIS SHEET BECOMES RESPONSIBLE FOR ITS USE IN THE END PRODUCT IN ACCORDANCE WITH RULE §137.33 (b) AND (c) OF THE TEXAS STATE BOARD OF REGISTRATION FOR PROFESSIONAL ENGINEERS.

P.E. SEAL AND SIGNATURE

REV	DESCRIPTION	DATE	APPR
1.	TYPICAL INTERCEPTOR OUTFALL STRUCTURE LAYOUT	11/21/05	

PROJECT ID#

PROJECT TITLE

INTERCEPTOR STRUCTURE DETAILS

PREPARED: CHECKED: APPROVED:

COMPANY INFORMATION AND LOGO GOES HERE

Harris County Flood Control District
9900 Northwest Freeway
Houston, Texas 77092

DATE: 11-21-05
SCALE: NTS

SHEET NUMBER
- OF -

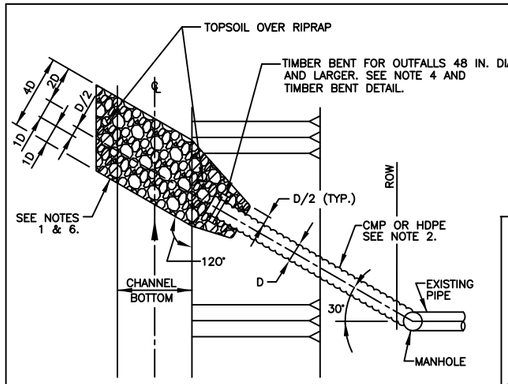

PLAN

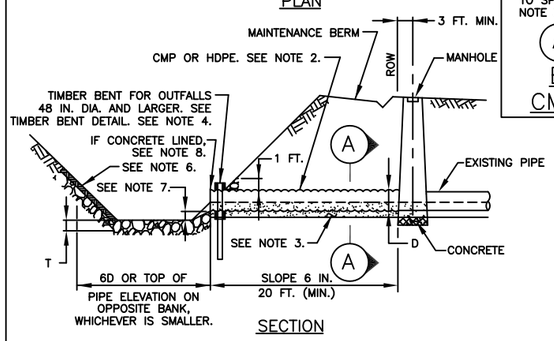

SECTION

TYPICAL STORM SEWER OUTFALL STRUCTURE LAYOUT

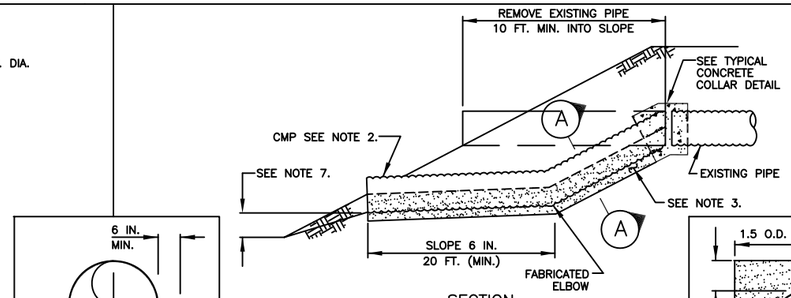

SECTION

PIPE ADJUSTMENT DETAIL 24–INCH TO 42–INCH DIAMETER

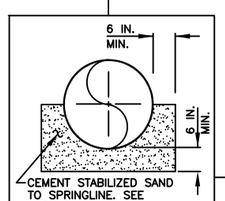

A SECTION

BEDDING CMP DETAIL

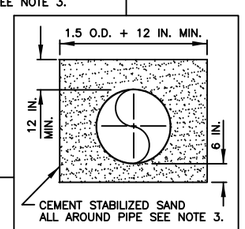

A SECTION

BEDDING HDPE PIPE DETAIL

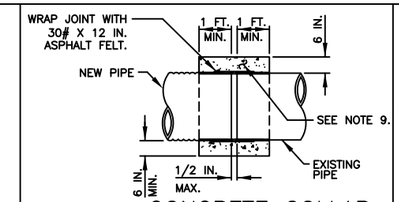

CONCRETE COLLAR DETAIL

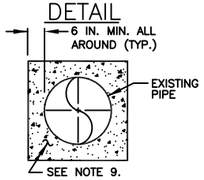

BEDDING CONCRETE PIPE DETAIL

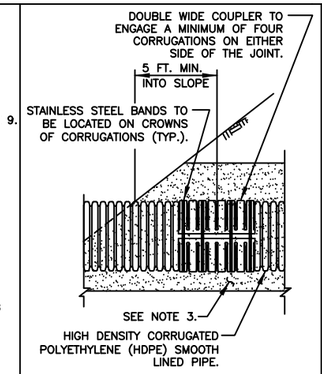

HDPE PIPE BAND COUPLER DETAIL

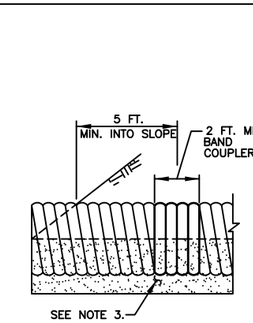

CMP BAND COUPLER DETAIL

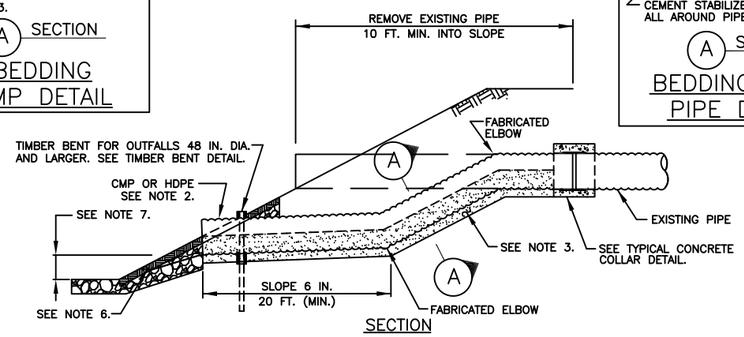

SECTION

PIPE ADJUSTMENT DETAIL 48–INCH AND LARGER DIAMETER

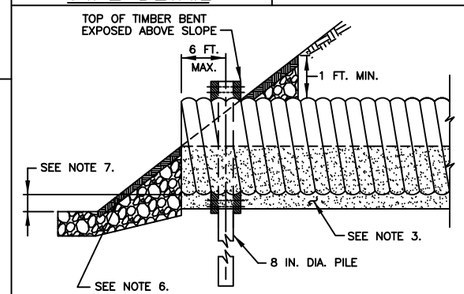

TYPICAL SECTION

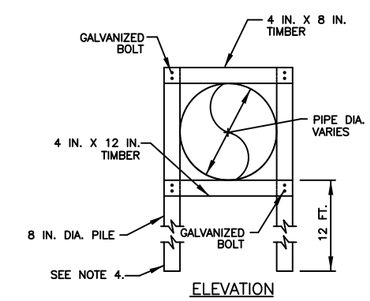

ELEVATION

TIMBER BENT DETAIL FOR 48–INCH AND LARGER OUTFALLS

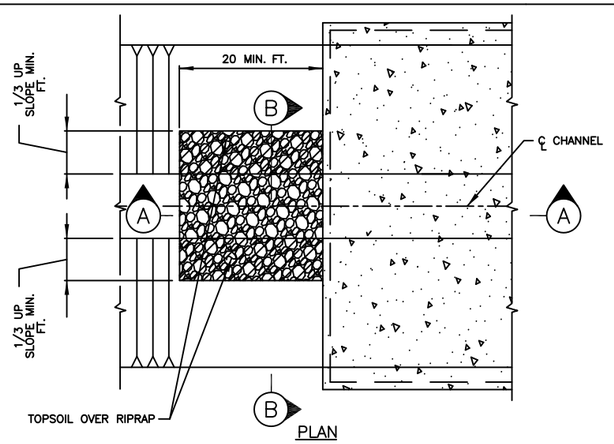

PLAN

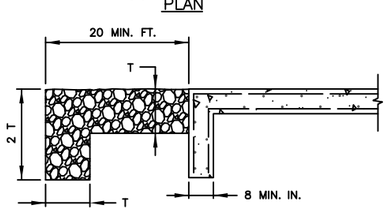

NOTE:
TOE–IN RIPRAP ACROSS CHANNEL BOTTOM & UP SLOPE. DO NOT PLACE TOE AGAINST CONCRETE.

A SECTION

NOTE:
T (MAT THICKNESS)
18 MIN. IN. GRADE 1

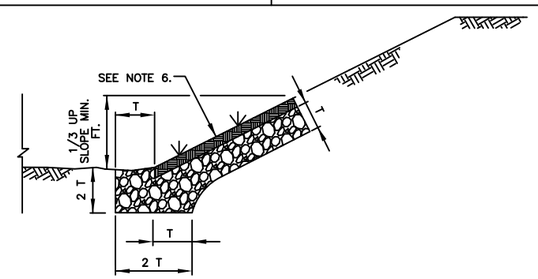

TYPICAL RIPRAP LINING DETAIL–SIDE SLOPE ONLY

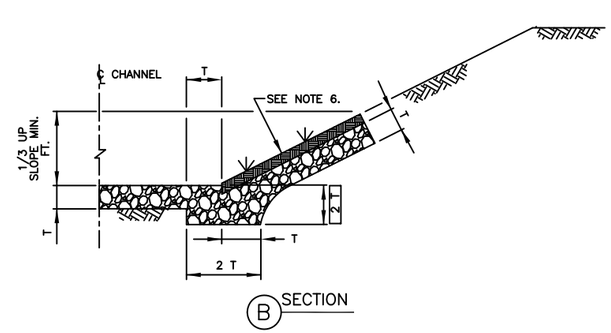

B SECTION

TYPICAL RIPRAP AT CONCRETE CHANNEL LINING

STORM SEWER OUTFALL NOTES:

1. INSTALL OUTFALLS 48 INCHES OR LARGER, AND STORM SEWER AND TREATMENT PLANT OUTFALLS OF ANY DIAMETER, WITH RIPRAP EROSION DIMENSIONED AS SHOWN IN "TYPICAL STORM SEWER OUTFALL STRUCTURE LAYOUT."
2. STORM SEWER OUTFALL PIPES WITHIN THE HCFCD RIGHT–OF–WAY SHALL BE CMP OR HDPE IN ACCORDANCE WITH SPECIFICATION SECTION 02642–CORRUGATED METAL PIPE, HIGH DENSITY POLYETHYLENE PIPE (HDPE) IN ACCORDANCE WITH SPECIFICATION SECTION 02505–HIGH DENSITY POLYETHYLENE PIPE, OR APPROVED EQUAL.
3. PROVIDE AND PLACE CEMENT STABILIZED SAND IN ACCORDANCE WITH SPECIFICATION SECTION NO. 02321–CEMENT STABILIZED SAND.
4. TIMBER BENTS SHALL BE IN ACCORDANCE WITH SPECIFICATION SECTION 02464–TIMBER BENTS.
5. STORM SEWER OUTFALLS SHALL BE IN ACCORDANCE WITH SPECIFICATION SECTION 02316–STRUCTURAL EXCAVATING AND BACKFILLING.
6. RIPRAP SHALL BE PLACED IN ACCORDANCE WITH SPECIFICATION SECTION 02378–RIPRAP AND GRANULAR FILL. FILL RIPRAP VOIDS AND BURY RIPRAP A MINIMUM OF 6 INCHES WITH TOPSOIL ON SIDE SLOPE AS DIRECTED BY THE ENGINEER.
7. SET FLOWLINE OF OUTFALLS 1 FOOT ABOVE CHANNEL FLOWLINE OR 1 FOOT ABOVE NORMAL WATER SURFACE ELEVATION.
8. SEE CONCRETE CHANNEL LINING DETAIL SHEET FOR CMP OR HDPE OUTFALL DETAILS THROUGH CONCRETE CHANNEL LINING.
9. STRUCTURAL CONCRETE #4 BARS (GRADE 40) 12 INCH O.C. EACH WAY – FOR COLLARS ONLY.

THIS DETAIL SHEET HAS BEEN PREPARED FOR USE ON HCFCD PROJECTS OR PROJECTS TO BE MAINTAINED BY THE HCFCD WHEN COMPLETED BY OTHERS. AN ENGINEER WHO INCORPORATES THE DETAILS ON THIS SHEET BECOMES RESPONSIBLE FOR ITS USE IN THE END PRODUCT IN ACCORDANCE WITH RULE §137.33 (b) AND (c) OF THE TEXAS STATE BOARD OF REGISTRATION FOR PROFESSIONAL ENGINEERS.

P.E. SEAL AND SIGNATURE

REV	DESCRIPTION	DATE	APPR

PROJECT ID#

PROJECT TITLE

STORM SEWER AND RIPRAP DETAILS

PREPARED:

CHECKED:

APPROVED:

COMPANY INFORMATION AND LOGO GOES HERE

Harris County Flood Control District
9900 Northwest Freeway
Houston, Texas 77092

DATE: 08–31–05
SCALE: NTS

SHEET NUMBER
— OF —

STD\STORM SEWER OUTFALL DETAILS

COT STM–33

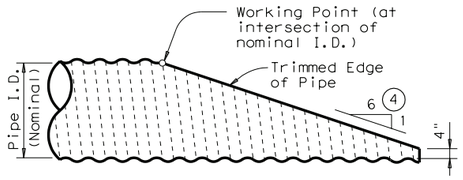

NOTE: All Cross Pipes, calculations, and dimensions are based on the pipe culverts mitered as shown in this detail. Alternate styles of mitered ends will require that appropriate adjustments be made to the values presented on this standard.

SIDE ELEVATION OF TYPICAL PIPE CULVERT MITER

(Showing Corrugated Metal Pipe Culvert.)
(Details at Concrete Pipe Culvert are similar.)

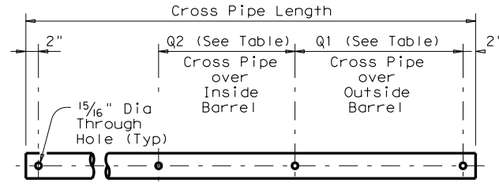

PIPE W/ BOLTED ANCHOR

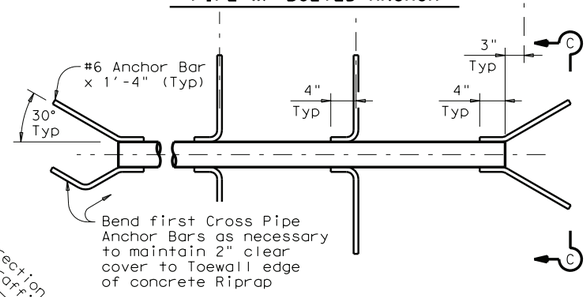

PIPE W/ ANCHOR BARS

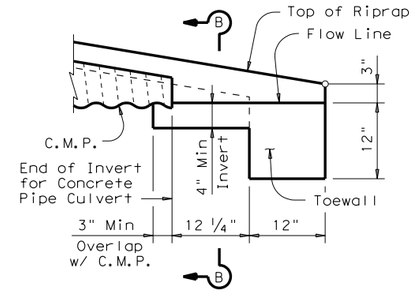

DETAIL "A"

(Showing Invert with Corrugated Metal Pipe Culvert. Concrete Pipe Culvert details are similar. Cross Pipes not shown for clarity.)

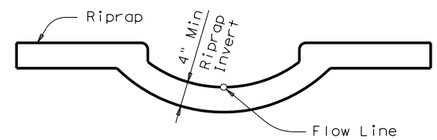

SECTION B-B

(Cross Pipes not shown for clarity.)

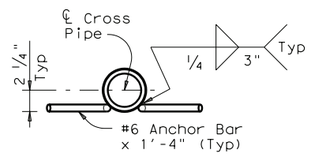

SECTION C-C

CROSS PIPE DETAILS

CROSS PIPE LENGTHS, REQUIRED PIPE SIZES, & RIPRAP QUANTITIES (2)							
Nominal Culvert I.D.	Conc Riprap (CY) (6)	Pipe Culvert Spa ~ G	Single Barrel ~ Q1	Multi-Barrel ~ Q1	Q2	Conditions for use of Cross Pipes	Cross Pipe Size
12"	0.6	9"	N/A	2'- 1"	1'- 9"	3 or more Pipe Culverts	3" Std (3.500" O.D.)
15"	0.7	11"	N/A	2'- 5"	2'- 2"		
18"	0.8	1'- 2"	N/A	2'-10"	2'- 8"		
21"	0.9	1'- 4"	N/A	3'- 2"	3'- 1"		
24"	0.9	1'- 7"	N/A	3'- 6"	3'- 7"		
27"	1.0	1'- 8"	N/A	3'-10"	3'-11"	3 or more Pipe Culverts	3 1/2" Std (4.000" O.D.)
30"	1.1	1'-10"	N/A	4'- 2"	4'- 4"	2 or more Pipe Culverts	
33"	1.2	1'-11"	4'- 2"	4'- 5"	4'- 8"	All Pipe Culverts	
36"	1.3	2'- 1"	4'- 5"	4'- 9"	5'- 1"	All Pipe Culverts	4" Std (4.500" O.D.)
42"	1.5	2'- 4"	4'-11"	5'- 5"	5'-10"		
48"	1.7	2'- 7"	5'- 5"	6'- 0"	6'- 7"	All Pipe Culverts	5" Std (5.563" O.D.)
54"	2.0	3'- 0"	5'-11"	6'- 9"	7'- 6"		
60"	2.2	3'- 3"	6'- 5"	7'- 4"	8'- 3"		
66"	2.4	3'- 3"	6'-11"	7'-10"	8'- 9"		
72"	2.7	3'- 4"	7'- 5"	8'- 5"	9'- 4"		

(1) The proper installation of the first Cross Pipe is critical for vehicle safety. The top of the first Cross Pipe must be placed at no more than 6" above the flow line.

(2) Size of Cross Pipes, except the first bottom pipe, shall be as shown in the PIPE SIZE table. The first bottom pipe shall be 3 1/2" Standard Pipe (4" O.D.).

(3) The third Cross Pipe from the bottom of the Culvert shall always be installed using a bolted connection. Care shall be taken to ensure that Riprap concrete does not flow into the Cross Pipe so as to permit disassembly of the bolted connection to allow cleanout access. At the Contractor's option, all other Cross Pipes may also be installed using the bolted connection details.

(4) Match Cross Slope as shown elsewhere in the plans. Cross Slope of 6:1 or flatter is required for vehicle safety.

(5) Riprap placed beyond the limits shown will be paid as Concrete Riprap in accordance with Item 432, "Riprap".

(6) Quantities shown are for one end of one reinforced Concrete Pipe Culvert. For multiple pipe culverts or for Corrugated Metal Pipe Culverts, quantities will need to be adjusted. Riprap quantities are for Contractor's information only.

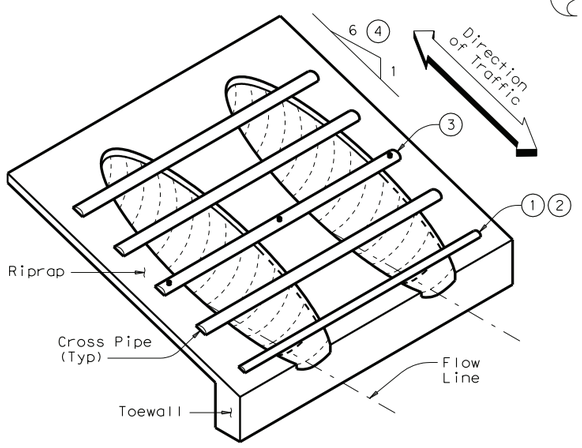

ISOMETRIC VIEW OF TYPICAL INSTALLATION

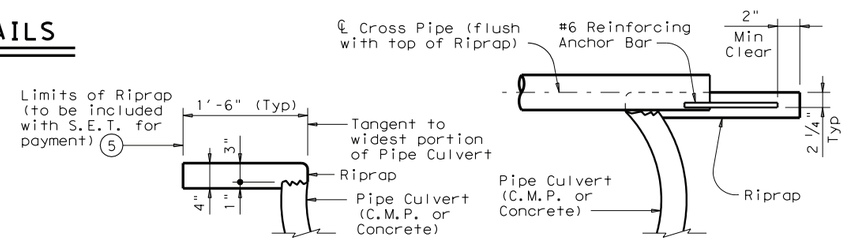

SHOWING TYPICAL PIPE CULVERT & RIPRAP

SHOWING CROSS PIPE WITH ANCHOR BAR

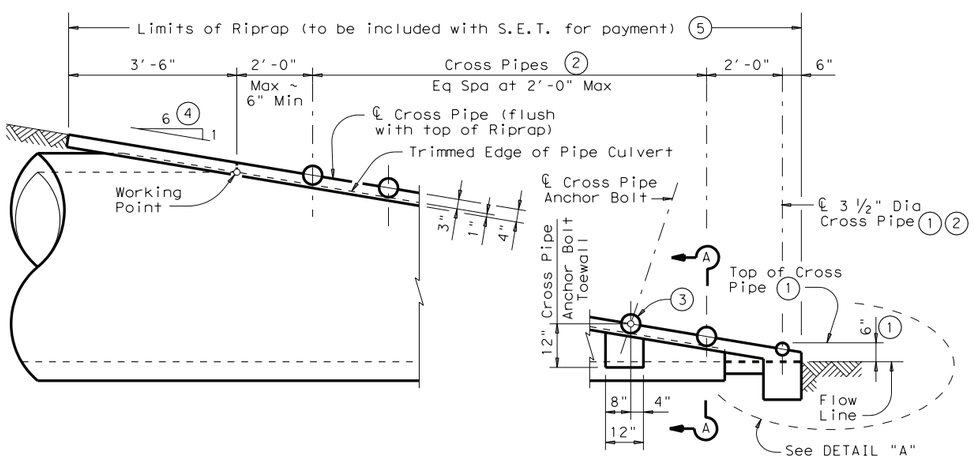

SIDE ELEVATION OF CAST-IN-PLACE CONCRETE

(Showing Concrete Pipe Culvert.)
(Details at Corrugated Metal Pipe Culvert are similar.)

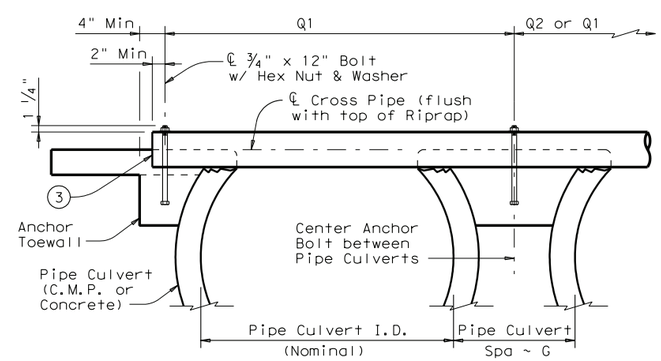

SHOWING CROSS PIPE WITH BOLTED ANCHOR

SECTION A-A

GENERAL NOTES:

Cross Pipes are designed for a traversing load of 10,000 pounds at yield as recommended by Research Report 280-2F, "Safety Treatment of of Roadside Parallel-Drainage Structures", Texas Transportation Institute, March 1981.

Safety End Treatments shown herein are intended for use in those installations where out of control vehicles are likely to traverse the openings approximately perpendicular to the Cross Pipes.

Riprap and all necessary inverts shall be Concrete Riprap conforming to the requirements of Item 432, "Riprap".

Payment for riprap and toewall is included in the Price Bid for each Safety End Treatment.

Cross Pipes shall conform to the requirements of ASTM A53 (Type E or S, Grade B), ASTM A500 (Grade B), or API 5LX52.

Bolts and nuts shall conform to ASTM A307.

All steel components, except concrete reinforcing, shall be galvanized after fabrication. Galvanizing damaged during transport or construction shall be repaired in accordance with the specifications.

DISCLAIMER:
The use of this standard is governed by the "Texas Engineering Practice Act". No warranty of any kind is made by TxDOT for any purpose whatsoever. TxDOT assumes no responsibility for the conversion of this standard to other formats or for incorrect results or damages resulting from its use.

ACC:

LEVELS DISPLAYED

1

Texas Department of Transportation
Bridge Division

SAFETY END TREATMENT
FOR 12" DIA TO 72" DIA PIPE CULVERTS TYPE II ~ PARALLEL DRAINAGE

SETP-PD

FILE: setppdse.dgn	DN: GAF	CK: CAT	DW: JRP	CK: GAF
©TxDOT February 2010	DISTRICT	FEDERAL AID PROJECT		SHEET
REVISIONS				
	COUNTY	CONTROL	SECT	JOB	HIGHWAY

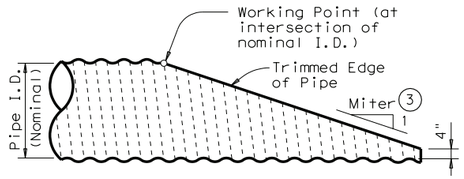

NOTE: All Pipe Runners, calculations, and dimensions are based on the pipe culverts mitered as shown in this detail. Alternate styles of mitered ends will require that appropriate adjustments be made to the values presented on this standard.

SIDE ELEVATION OF TYPICAL PIPE CULVERT MITER

(Showing Corrugated Metal Pipe Culvert. Details of Concrete Pipe Culvert are similar.)

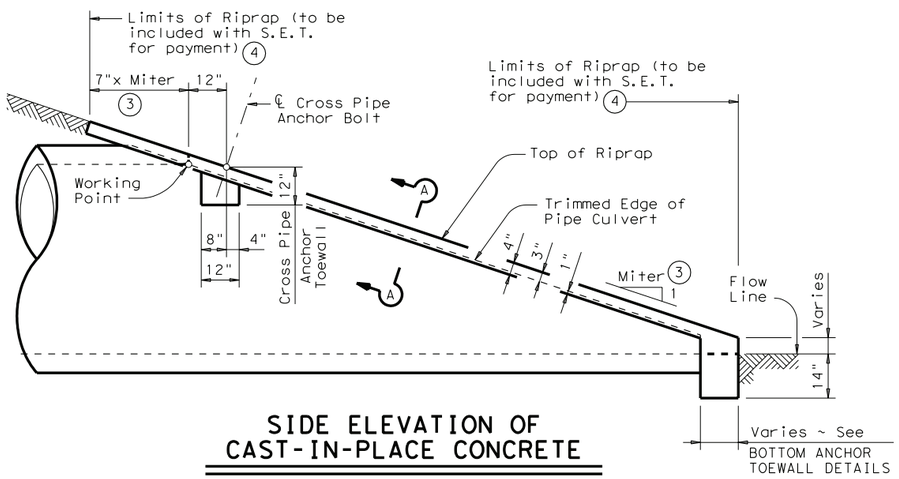

SIDE ELEVATION OF CAST-IN-PLACE CONCRETE

(Showing Concrete Pipe Culvert. Details of Corrugated Metal Pipe Culvert are similar. Pipe Runners not shown for clarity)

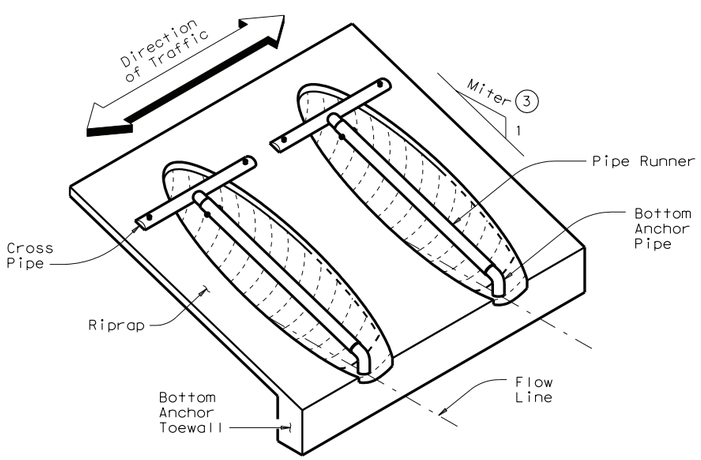

ISOMETRIC VIEW OF TYPICAL INSTALLATION

(Showing installation with no skew.)

CROSS PIPE LENGTHS & PIPE RUNNER LENGTHS (1)(2)

Nominal Culvert I.D.	Pipe Culvert Spa ~ G	Cross Pipe Length	Pipe Runner Length											
			3:1 Side Slope				4:1 Side Slope				6:1 Side Slope			
			0° Skew	15° Skew	30° Skew	45° Skew	0° Skew	15° Skew	30° Skew	45° Skew	0° Skew	15° Skew	30° Skew	45° Skew
24"	1'- 7"	3'- 5"	N/A	N/A	N/A	5'-10"	N/A	N/A	N/A	8'- 1"	N/A	N/A	N/A	12'- 9"
27"	1'- 8"	3'- 8"	N/A	N/A	5'- 5"	6'-11"	N/A	N/A	7'- 7"	9'- 7"	N/A	N/A	11'-11"	14'-11"
30"	1'-10"	3'-11"	N/A	N/A	6'- 4"	8'- 0"	N/A	N/A	8'- 9"	11'- 0"	N/A	N/A	13'- 8"	17'- 0"
33"	1'-11"	4'- 2"	6'- 2"	6'- 5"	7'- 3"	9'- 1"	8'- 6"	8'-10"	10'- 0"	12'- 5"	13'- 3"	13'- 9"	15'- 5"	19'- 2"
36"	2'- 1"	4'- 5"	6'-11"	7'- 3"	8'- 2"	10'- 2"	9'- 6"	9'-11"	11'- 2"	13'-10"	14'- 9"	15'- 3"	17'- 2"	21'- 3"
42"	2'- 4"	4'-11"	8'- 6"	8'-10"	9'-11"	12'- 4"	11'- 7"	12'- 0"	13'- 6"	16'- 8"	17'- 9"	18'- 5"	20'- 8"	25'- 7"
48"	2'- 7"	5'- 5"	10'- 1"	10'- 5"	11'- 9"	N/A	13'- 7"	14'- 2"	15'-10"	N/A	20'- 9"	21'- 6"	24'- 2"	N/A
54"	3'- 0"	5'-11"	11'- 8"	12'- 1"	N/A	N/A	15'- 8"	16'- 3"	N/A	N/A	23'-10"	24'- 8"	N/A	N/A
60"	3'- 3"	6'- 5"	13'- 3"	N/A	N/A	N/A	17'- 9"	N/A	N/A	N/A	26'-10"	N/A	N/A	N/A

TYPICAL PIPE CULVERT MITERS (3)

Side Slope	0° Skew	15° Skew	30° Skew	45° Skew
3:1	3:1	3.106:1	3.464:1	4.243:1
4:1	4:1	4.141:1	4.619:1	5.657:1
6:1	6:1	6.212:1	6.928:1	8.485:1

CONDITIONS WHERE PIPE RUNNERS ARE NOT REQUIRED (2)

Nominal Culvert I.D.	Single Pipe Culvert	Multiple Pipe Culverts
12" thru 21"	Skews thru 45°	Skews thru 45°
24"	Skews thru 45°	Skews thru 30°
27"	Skews thru 30°	Skews thru 15°
30"	Skews thru 15°	Skews thru 15°
33"	Skews thru 15°	Always required
36"	Normal (No Skew)	Always required
42" to 60"	Always required	Always required

STANDARD PIPE SIZES & MAX PIPE RUNNER LENGTHS (1)

Pipe Size	Pipe O.D.	Pipe I.D.	Max Pipe Runner Length
2" STD	2.375"	2.067"	N/A
3" STD	3.500"	3.068"	10'- 0"
4" STD	4.500"	4.026"	19'- 8"
5" STD	5.563"	5.047"	34'- 2"

ESTIMATED CONCRETE RIPRAP QUANTITIES (CY) (5)

Nominal Culvert I.D.	3:1 Side Slope				4:1 Side Slope				6:1 Side Slope			
	0° Skew	15° Skew	30° Skew	45° Skew	0° Skew	15° Skew	30° Skew	45° Skew	0° Skew	15° Skew	30° Skew	45° Skew
12"	0.4	0.4	0.5	0.5	0.5	0.5	0.5	0.6	0.7	0.7	0.7	0.8
15"	0.5	0.5	0.5	0.6	0.6	0.6	0.6	0.7	0.7	0.7	0.8	0.9
18"	0.5	0.5	0.6	0.6	0.6	0.7	0.7	0.8	0.8	0.8	0.9	1.0
21"	0.6	0.6	0.6	0.7	0.7	0.7	0.8	0.9	0.9	0.9	1.0	1.2
24"	0.6	0.7	0.7	0.8	0.8	0.8	0.8	1.0	1.0	1.0	1.1	1.3
27"	0.7	0.7	0.8	0.9	0.8	0.9	0.9	1.1	1.1	1.1	1.2	1.4
30"	0.8	0.8	0.8	0.9	0.9	0.9	1.0	1.2	1.2	1.2	1.3	1.6
33"	0.8	0.8	0.9	1.0	1.0	1.0	1.1	1.3	1.3	1.4	1.5	1.7
36"	0.9	0.9	0.9	1.1	1.1	1.1	1.2	1.4	1.4	1.5	1.6	1.8
42"	1.0	1.0	1.1	1.3	1.2	1.3	1.3	1.6	1.6	1.7	1.8	2.1
48"	1.1	1.1	1.2	N/A	1.4	1.4	1.5	N/A	1.9	1.9	2.1	N/A
54"	1.3	1.3	N/A	N/A	1.6	1.6	N/A	N/A	2.1	2.1	N/A	N/A
60"	1.4	N/A	N/A	N/A	1.7	N/A	N/A	N/A	2.3	N/A	N/A	N/A

(1) Size of Pipe Runner shall be as shown in the tables. Cross Pipe shall be the same size as the Pipe Runner. Cross Pipe Stub Out and Bottom Anchor Pipe shall be the next smaller size pipe as shown in the STANDARD PIPE SIZES table.

(2) This standard allows for the placement of only one pipe runner across each culvert pipe opening. In order to limit the clear opening to be traversed by an errant vehicle, the following conditions must be met:

For 60" culvert pipes, the skew must not exceed 0°.
For 54" culvert pipes, the skew must not exceed 15°.
For 48" culvert pipes, the skew must not exceed 30°.
For all culvert pipe sizes 42" and less, the skew must not exceed 45°.

If the above conditions cannot be met, the designer should consider using a safety end treatment with flared wings. For further information, refer to the TxDOT "Roadway Design Manual".

(3) Miter = Slope of Mitered Pipe Culvert End

(4) Riprap placed beyond the limits shown will be paid as Concrete Riprap in accordance with Item 432, "Riprap".

(5) Quantities shown are for one end of one reinforced Concrete Pipe Culvert. For multiple Pipe Culverts or for Corrugated Metal Pipe Culverts, quantities will need to be adjusted. Riprap quantities are for Contractor's information only.

DISCLAIMER:
The use of this standard is governed by the "Texas Engineering Practice Act". No warranty of any kind is made by TxDOT for any purpose whatsoever. TxDOT assumes no responsibility for the conversion of this standard to other formats or for incorrect results or damages resulting from its use.

LEVELS DISPLAYED | ACC:

SHEET 1 OF 2

Texas Department of Transportation
Bridge Division

SAFETY END TREATMENT
FOR 12" DIA TO 60" DIA PIPE CULVERTS TYPE II ~ CROSS DRAINAGE

SETP-CD

FILE: setpcdse.dgn	DN: GAF	CK: CAT	DW: JRP	CK: GAF
© TxDOT February 2010	DISTRICT	FEDERAL AID PROJECT		SHEET
REVISIONS	COUNTY	CONTROL	SECT	JOB	HIGHWAY

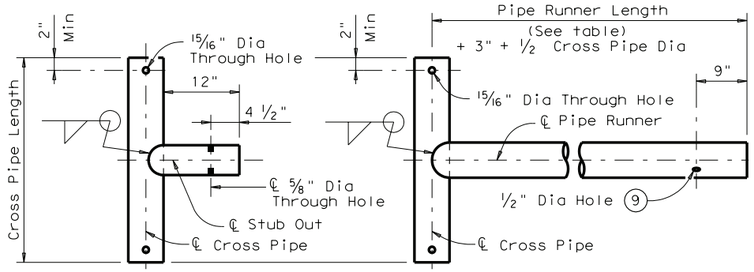

OPTION A1 OPTION A2

CROSS PIPE AND CONNECTIONS DETAILS

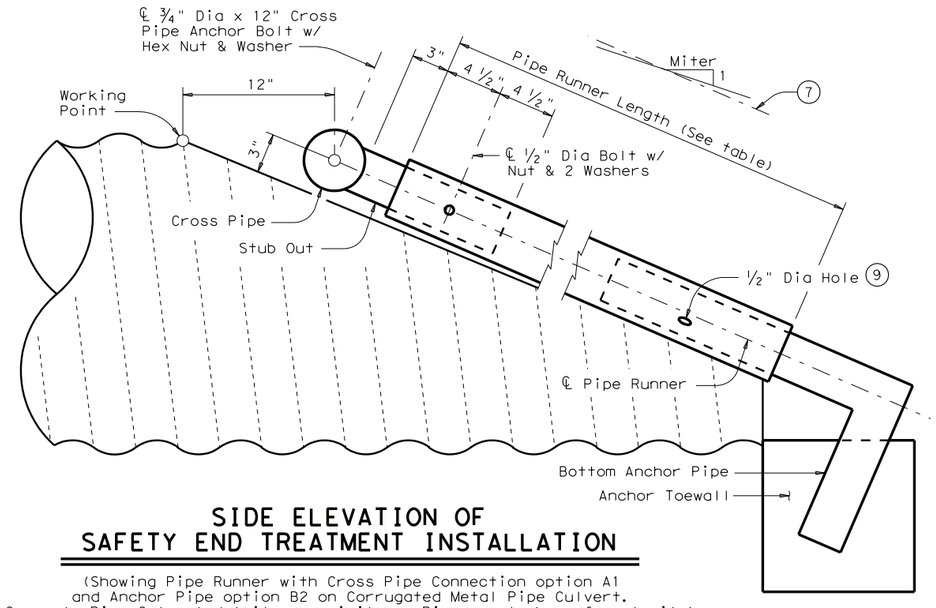

SIDE ELEVATION OF SAFETY END TREATMENT INSTALLATION

(Showing Pipe Runner with Cross Pipe Connection option A1 and Anchor Pipe option B2 on Corrugated Metal Pipe Culvert. Concrete Pipe Culvert details are similar. Riprap not shown for clarity)

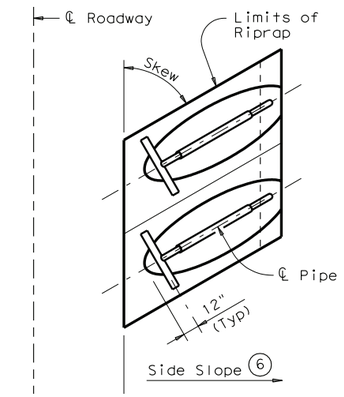

PLAN OF SKEWED INSTALLATION

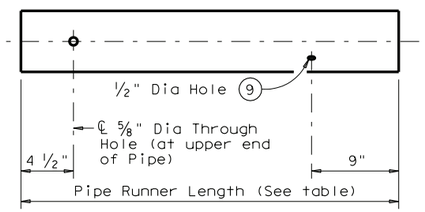

NOTE: The separate Pipe Runner shown is required when Cross Pipe Connection Option A1 is used.

PIPE RUNNER DETAILS

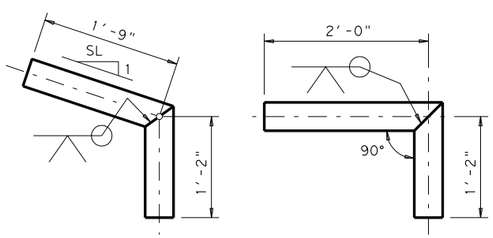

OPTION B1 OPTION B2

BOTTOM ANCHOR PIPE DETAILS (10)

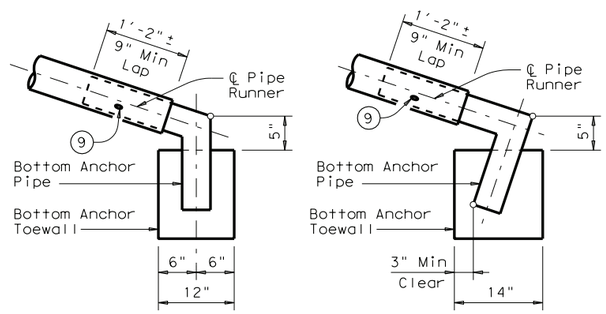

OPTION B1 OPTION B2

BOTTOM ANCHOR TOEWALL DETAILS

(Culvert & Riprap not shown for clarity)

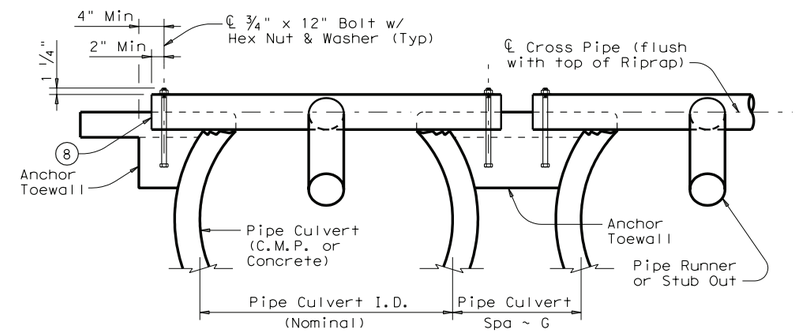

SHOWING CROSS PIPE & ANCHOR TOEWALL

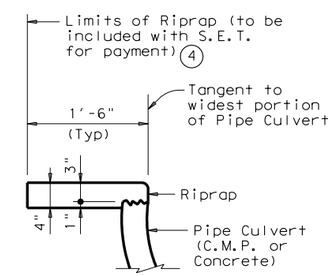

SHOWING TYPICAL PIPE CULVERT & RIPRAP

SECTION A-A

(6) Recommended values of side slope are 3:1, 4:1, & 6:1. All quantities, calculations, and dimensions shown herein are based on these recommended values. Slope of 3:1 or flatter is required for vehicle safety.

(7) Note that actual slope of Pipe Runner may vary slightly from Side Slope of Riprap and trimmed Culvert Pipe edge.

(8) Care shall be taken to ensure that Riprap concrete does not flow into the Cross Pipe so as to permit disassembly of the bolted connection to allow cleanout access.

(9) After installation, the 1/2" hole shall be inspected to ensure that the lap of the Pipe Runner with the Bottom Anchor Pipe is adequate.

(10) At fabricator's option, a heat bend to a smooth 5" radius or a manufactured elbow (of the same material as the Runner) may be substituted for the mitered and welded joint in the Bottom Anchor Pipe.

GENERAL NOTES:

Pipe Runners are designed for a traversing load of 1,800 pounds at yield as recommended by Research Report 280-1, "Safety Treatment of Roadside Cross-Drainage Structures", Texas Transportation Institute, March 1981.

The Safety End Treatments shown herein are intended for use in those installations where out of control vehicles are likely to traverse the openings approximately perpendicular to the Pipe Runners.

Riprap and all necessary inverts shall be Concrete Riprap conforming to the requirements of Item 432, "Riprap".

Payment for riprap and toewall is included in the Price Bid for each Safety End Treatment.

Pipe Runners, Cross Pipes, and Anchor Pipes shall conform to the requirements of ASTM A53 (Type E or S, Grade B), ASTM A500 (Grade B), or API 5LX52.

Bolts and nuts shall conform to ASTM A307.

All steel components, except concrete reinforcing, shall be galvanized after fabrication. Galvanizing damaged during transport or construction shall be repaired in accordance with the specifications.

DISCLAIMER:
The use of this standard is governed by the "Texas Engineering Practice Act". No warranty of any kind is made by TxDOT for any purpose whatsoever. TxDOT assumes no responsibility for the conversion of this standard to other formats or for incorrect results or damages resulting from its use.

LEVELS DISPLAYED 1 ACC:

SHEET 2 OF 2

Texas Department of Transportation
Bridge Division

SAFETY END TREATMENT
FOR 12" DIA TO 60" DIA PIPE CULVERTS TYPE II ~ CROSS DRAINAGE

SETP-CD

FILE: setpcdse.dgn	DN: GAF	CK: CAT	DW: JRP	CK: GAF
©TxDOT February 2010	DISTRICT	FEDERAL AID PROJECT		SHEET
REVISIONS				
	COUNTY	CONTROL	SECT	JOB	HIGHWAY

TABLE OF VARIABLE DIMENSIONS AND QUANTITIES FOR ONE HEADWALL (4)

SLOPE	DIA OF PIPE, D	Values for one Pipe						Values to be added for each addt'l Pipe		
		W	X	Y	L	Reinf (Lbs)	Conc (CY) (1)	X and W	Reinf (Lbs)	Conc (CY) (1)
2:1	12"	4'- 7 1/2"	2'- 6"	2'-10"	3'- 3 1/4"	84	0.6	1'- 9"	20	0.2
	15"	5'- 5 3/4"	2'- 9 1/2"	3'- 4"	3'-10 1/4"	99	0.7	2'- 2"	24	0.3
	18"	6'- 4 1/4"	3'- 1"	3'-10"	4'- 5"	120	0.9	2'- 8"	32	0.3
	21"	7'- 2 3/4"	3'- 4 1/2"	4'- 4"	5'- 0"	137	1.1	3'- 1"	43	0.4
	24"	8'- 2 1/2"	3'- 9 1/2"	4'-10"	5'- 7"	158	1.3	3'- 7"	50	0.5
	27"	9'- 1"	4'- 1"	5'- 4"	6'- 2"	173	1.5	3'-11"	56	0.6
	30"	9'-11 1/2"	4'- 4 1/2"	5'-10"	6'- 8 3/4"	197	1.7	4'- 4"	65	0.8
	33"	10'-10"	4'- 8"	6'- 4"	7'- 3 3/4"	216	2.0	4'- 8"	71	0.9
	36"	11'- 8 1/4"	4'-11 1/2"	6'-10"	7'-10 3/4"	241	2.2	5'- 1"	81	1.0
	42"	13'- 5 1/4"	5'- 6 1/2"	7'-10"	9'- 0 1/2"	290	2.8	5'-10"	97	1.3
	48"	15'- 9"	6'- 1 1/2"	9'- 4"	10'- 9 1/4"	350	3.8	6'- 7"	117	1.7
	54"	17'- 5 3/4"	6'- 8 1/2"	10'- 4"	11'-11 1/4"	415	4.5	7'- 6"	151	2.1
	60"	19'- 2 3/4"	7'- 3 1/2"	11'- 4"	13'- 1"	469	5.3	8'- 3"	174	2.5
	66"	20'-11 1/2"	7'-10 1/2"	12'- 4"	14'- 3"	530	6.2	8'- 9"	194	2.9
	72"	22'- 8 1/2"	8'- 5 1/2"	13'- 4"	15'- 4 3/4"	587	7.1	9'- 4"	213	3.3
3:1	12"	6'- 3"	2'- 6"	4'- 3"	4'-11"	114	0.8	1'- 9"	22	0.2
	15"	7'- 5"	2'- 9 1/2"	5'- 0"	5'- 9 1/4"	133	1.1	2'- 2"	28	0.3
	18"	8'- 6 3/4"	3'- 1"	5'- 9"	6'- 7 3/4"	166	1.3	2'- 8"	37	0.5
	21"	9'- 8 3/4"	3'- 4 1/2"	6'- 6"	7'- 6"	189	1.6	3'- 1"	48	0.6
	24"	11'- 0"	3'- 9 1/2"	7'- 3"	8'- 4 1/2"	221	2.0	3'- 7"	58	0.7
	27"	12'- 2"	4'- 1"	8'- 0"	9'- 2 3/4"	245	2.3	3'-11"	67	0.8
	30"	13'- 4"	4'- 4 1/2"	8'- 9"	10'- 1 1/4"	287	2.7	4'- 4"	77	1.0
	33"	14'- 5 3/4"	4'- 8"	9'- 6"	10'-11 3/4"	310	3.1	4'- 8"	84	1.2
	36"	15'- 7 3/4"	4'-11 1/2"	10'- 3"	11'-10"	343	3.5	5'- 1"	96	1.4
	42"	17'-11 1/2"	5'- 6 1/2"	11'- 9"	13'- 6 3/4"	424	4.5	5'-10"	119	1.7
	48"	21'- 1 3/4"	6'- 1 1/2"	14'- 0"	16'- 2"	527	6.1	6'- 7"	146	2.3
	54"	23'- 5 1/2"	6'- 8 1/2"	15'- 6"	17'-10 3/4"	618	7.3	7'- 6"	186	2.9
	60"	25'- 9 1/4"	7'- 3 1/2"	17'- 0"	19'- 7 1/2"	707	8.7	8'- 3"	219	3.4
	66"	28'- 1"	7'-10 1/2"	18'- 6"	21'- 4 1/4"	797	10.1	8'- 9"	242	3.9
	72"	30'- 4 3/4"	8'- 5 1/2"	20'- 0"	23'- 1 1/4"	910	11.7	9'- 4"	272	4.4
4:1	12"	7'-10 3/4"	2'- 6"	5'- 8"	6'- 6 1/2"	144	1.1	1'- 9"	24	0.3
	15"	9'- 4"	2'- 9 1/2"	6'- 8"	7'- 8 1/2"	177	1.5	2'- 2"	32	0.4
	18"	10'- 9 1/2"	3'- 1"	7'- 8"	8'-10 1/4"	217	1.9	2'- 8"	42	0.5
	21"	12'- 2 3/4"	3'- 4 1/2"	8'- 8"	10'- 0"	254	2.3	3'- 1"	57	0.7
	24"	13'- 9 1/2"	3'- 9 1/2"	9'- 8"	11'- 2"	295	2.8	3'- 7"	67	0.9
	27"	15'- 3"	4'- 1"	10'- 8"	12'- 3 3/4"	328	3.3	3'-11"	77	1.0
	30"	16'- 8 1/4"	4'- 4 1/2"	11'- 8"	13'- 5 3/4"	379	3.8	4'- 4"	89	1.3
	33"	18'- 1 3/4"	4'- 8"	12'- 8"	14'- 7 1/2"	417	4.5	4'- 8"	101	1.4
	36"	19'- 7"	4'-11 1/2"	13'- 8"	15'- 9 1/4"	464	5.1	5'-1"	115	1.7
	42"	22'- 5 3/4"	5'- 6 1/2"	15'- 8"	18'- 1"	575	6.5	5'-10"	141	2.1
	48"	26'- 6 1/4"	6'- 1 1/2"	18'- 8"	21'- 6 3/4"	720	8.9	6'- 7"	175	2.8
	54"	29'- 5"	6'- 8 1/2"	20'- 8"	23'-10 1/4"	863	10.7	7'- 6"	226	3.6
	60"	32'- 3 3/4"	7'- 3 1/2"	22'- 8"	26'- 2"	984	12.7	8'- 3"	264	4.3
	66"	35'- 2 1/2"	7'-10 1/2"	24'- 8"	28'- 5 3/4"	1126	14.9	8'- 9"	300	4.9
	72"	38'- 1 1/4"	8'- 5 1/2"	26'- 8"	30'- 9 1/2"	1283	17.3	9'- 4"	334	5.6
6:1	12"	11'- 2"	2'- 6"	8'- 6"	9'- 9 3/4"	220	1.9	1'- 9"	28	0.4
	15"	13'- 2 1/4"	2'- 9 1/2"	10'- 0"	11'- 6 1/2"	264	2.5	2'- 2"	37	0.5
	18"	15'- 2 1/2"	3'- 1"	11'- 6"	13'- 3 1/4"	326	3.2	2'- 8"	50	0.7
	21"	17'- 2 3/4"	3'- 4 1/2"	13'- 0"	15'- 0 1/4"	381	3.9	3'- 1"	69	0.9
	24"	19'- 4 1/2"	3'- 9 1/2"	14'- 6"	16'- 9"	447	4.8	3'- 7"	80	1.2
	27"	21'- 4 3/4"	4'- 1"	16'- 0"	18'- 5 3/4"	506	5.7	3'-11"	96	1.4
	30"	23'- 5 1/4"	4'- 4 1/2"	17'- 6"	20'- 2 1/2"	587	6.7	4'- 4"	110	1.7
	33"	25'- 5 1/2"	4'- 8"	19'- 0"	21'-11 1/4"	667	7.8	4'- 8"	127	2.0
	36"	27'- 5 3/4"	4'-11 1/2"	20'- 6"	23'- 8"	727	9.0	5'- 1"	144	2.3
	42"	31'- 6 1/4"	5'- 6 1/2"	23'- 6"	27'- 1 1/2"	914	11.5	5'-10"	179	3.0
	48"	37'- 3 1/2"	6'- 1 1/2"	28'- 0"	32'- 4"	1181	15.9	6'- 7"	231	4.0
	54"	41'- 4 1/4"	6'- 8 1/2"	31'- 0"	35'- 9 1/2"	1412	19.2	7'- 6"	300	5.0
	60"	45'- 4 3/4"	7'- 3 1/2"	34'- 0"	39'- 3"	1619	22.9	8'- 3"	353	6.0

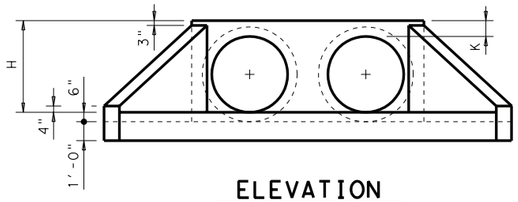

ELEVATION

Showing dimensions

1. Quantities shown are for concrete pipe and will increase slightly for metal pipe installations.
2. For vehicle safety, curbs shall project no more than 3" above finished grade. Curb heights shall be reduced, if necessary, to meet these requirements. No changes will be made in quantities and no additional compensation will be allowed for this work.
3. Provide a 1'-0" footing as shown where required to maintain 4" Min cover for pipes.
4. Quantities shown are for one structure end only (one headwall).
5. Min Length = 6" + 3" x $\left(\frac{12 \times H - 7}{12 \times L}\right)$

   Max Length = 12 x H - 3" x $\left(\frac{12 \times H - 7}{12 \times L}\right)$ - 1"
6. Lengths of wings based on SL:1 Slope along this line.

TABLE OF REINFORCING STEEL (4)

Bar	Size	Spa	No.
A	# 4	1'-0"	~
B	# 3	1'-6"	~
C	# 4	1'-0"	~
D	# 3	1'-0"	~
E	# 5	~	4
F	# 5	~	~
G	# 3	~	2
S	# 4	~	6
V	# 4	1'-0"	~
W	# 5	~	4

TABLE OF CONSTANT DIMENSIONS

DIA OF PIPE, D	G	K	H
12"	9"	1'- 0"	2'- 0"
15"	11"	1'- 0"	2'- 3"
18"	1'- 2"	1'- 0"	2'- 6"
21"	1'- 4"	1'- 0"	2'- 9"
24"	1'- 7"	1'- 0"	3'- 0"
27"	1'- 8"	1'- 0"	3'- 3"
30"	1'-10"	1'- 0"	3'- 6"
33"	1'-11"	1'- 0"	3'- 9"
36"	2'- 1"	1'- 0"	4'- 0"
42"	2'- 4"	1'- 0"	4'- 6"
48"	2'- 7"	1'- 3"	5'- 3"
54"	3'- 0"	1'- 3"	5'- 9"
60"	3'- 3"	1'- 3"	6'- 3"
66"	3'- 3"	1'- 3"	6'- 9"
72"	3'- 4"	1'- 3"	7'- 3"

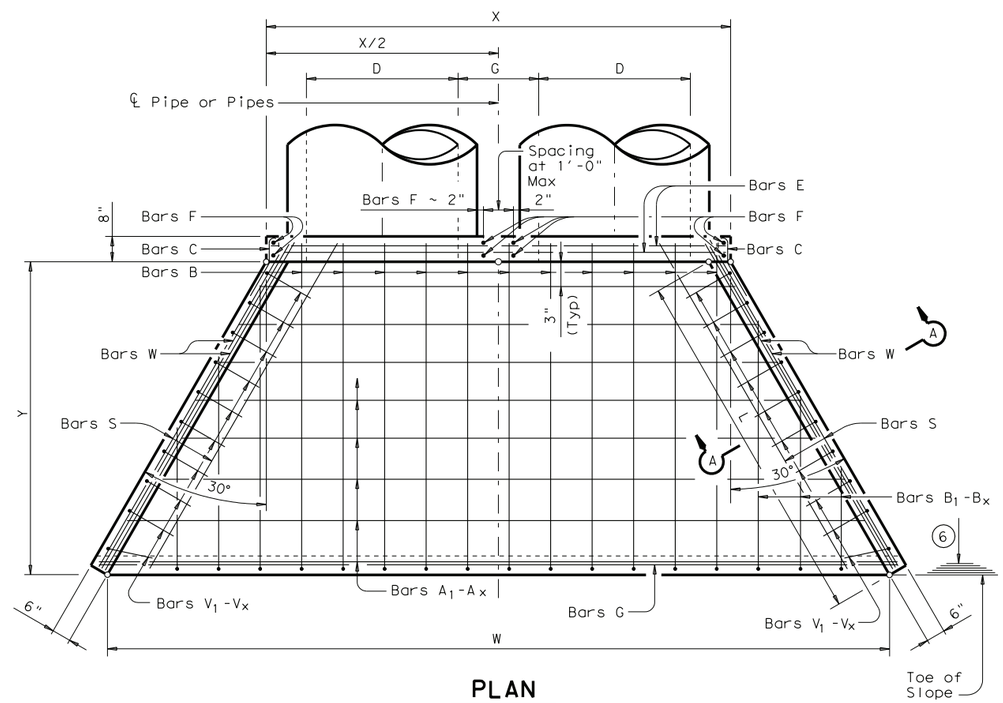

PLAN

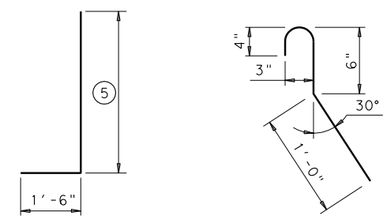

BARS V

BARS C
(2'-0" long)

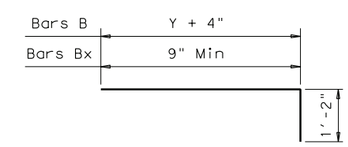

BARS B & B1-Bx

GENERAL NOTES:

Designed according to AASHTO LRFD Specifications.

Reinforcing steel shall be placed with the center of the outside layer of bars 2" from the surface of the concrete.

All reinforcing steel shall be Grade 60.

All concrete shall be Class "C" and shall have a minimum compressive strength of 3600 psi.

No bridge rails of any type may be mounted directly to these culvert headwalls.

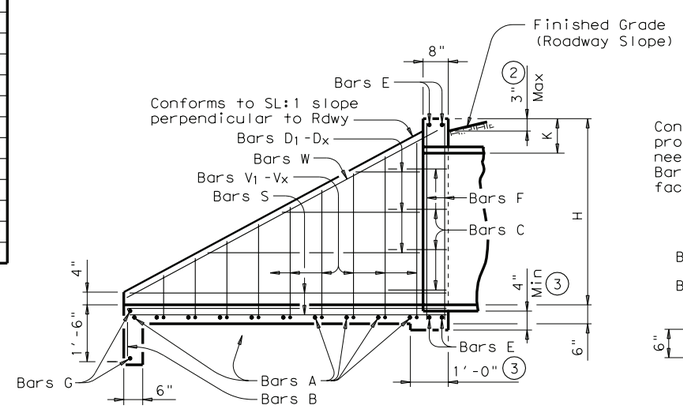

TYPICAL WING ELEVATION

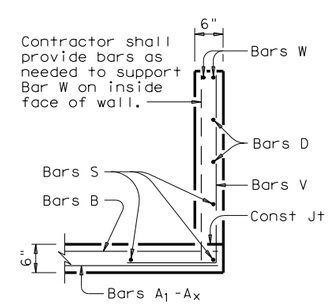

SECTION A-A

DISCLAIMER:
The use of this standard is governed by the "Texas Engineering Practice Act". No warranty of any kind is made by TxDOT for any purpose whatsoever. TxDOT assumes no responsibility for the conversion of this standard to other formats or for incorrect results or damages resulting from its use.

LEVELS DISPLAYED

ACC:

1

Texas Department of Transportation
Bridge Division

CONCRETE HEADWALLS WITH FLARED WINGS FOR 0° SKEW PIPE CULVERTS

CH-FW-0

FILE: chfw00se.dgn	DN: TxDOT	CK: TxDOT	DW: TxDOT	CK: GAF
© TxDOT February 2010	DISTRICT	FEDERAL AID PROJECT		SHEET
REVISIONS	COUNTY	CONTROL	SECT	JOB	HIGHWAY

TABLE OF VARIABLE DIMENSIONS AND QUANTITIES FOR ONE HEADWALL (4)

SLOPE	DIA OF PIPE, D	Values for one Pipe						Values to be added for each addt'l Pipe		
		W	X	Y	L	Reinf (Lbs)	Conc (CY) (1)	X and W	Reinf (Lbs)	Conc (CY) (1)
2:1	12"	3'- 3 1/2"	2'- 8 3/4"	2'-10"	3'- 3 1/4"	81	0.5	1'- 9 3/4"	20	0.2
	15"	3'-10 1/2"	3'- 0 1/4"	3'- 4"	3'-10 1/4"	93	0.6	2'- 3"	25	0.3
	18"	4'- 5 1/2"	3'- 4"	3'-10"	4'- 5"	115	0.8	2'- 9 1/4"	32	0.4
	21"	5'- 0 3/4"	3'- 7 1/2"	4'- 4"	5'- 0"	128	0.9	3'- 2 1/4"	43	0.5
	24"	5'- 9 1/4"	4'- 0 3/4"	4'-10"	5'- 7"	148	1.1	3'- 8 1/2"	51	0.6
	27"	6'- 4 1/2"	4'- 4 1/2"	5'- 4"	6'- 2"	158	1.3	4'- 0 3/4"	57	0.7
	30"	6'-11 1/2"	4'- 8"	5'-10"	6'- 8 3/4"	181	1.5	4'- 5 3/4"	67	0.8
	33"	7'- 6 1/2"	4'-11 3/4"	6'- 4"	7'- 3 3/4"	197	1.7	4'-10"	73	0.9
	36"	8'- 1 3/4"	5'- 3 1/4"	6'-10"	7'-10 3/4"	223	1.9	5'- 3 1/4"	82	1.1
	42"	9'- 3 3/4"	5'-10 1/2"	7'-10"	9'- 0 1/2"	263	2.4	6'- 0 1/2"	100	1.4
	48"	10'- 9 1/2"	6'- 5 3/4"	9'- 4"	10'- 9 1/4"	315	3.2	6'- 9 3/4"	121	1.8
	54"	11'-11 3/4"	7'- 1"	10'- 4"	11'-11 1/4"	372	3.8	7'- 9 1/4"	154	2.2
	60"	13'- 1 3/4"	7'- 8 1/4"	11'- 4"	13'- 1"	419	4.5	8'- 6 1/2"	178	2.6
	66"	14'- 4"	8'- 3 1/2"	12'- 4"	14'- 3"	475	5.3	9'- 0 3/4"	198	3.0
	72"	15'- 6 1/4"	8'-10 3/4"	13'- 4"	15'- 4 3/4"	523	6.1	9'- 8"	220	3.3
3:1	12"	4'- 1 1/4"	2'- 8 3/4"	4'- 3"	4'-11"	104	0.7	1'- 9 3/4"	23	0.2
	15"	4'-10"	3'- 0 1/4"	5'- 0"	5'- 9 1/4"	123	0.9	2'- 3"	29	0.3
	18"	5'- 7"	3'- 4"	5'- 9"	6'- 7 3/4"	152	1.1	2'- 9 1/4"	37	0.5
	21"	6'- 3 3/4"	3'- 7 1/2"	6'- 6"	7'- 6"	171	1.3	3'- 2 1/4"	49	0.6
	24"	7'- 2"	4'- 0 3/4"	7'- 3"	8'- 4 1/2"	198	1.6	3'- 8 1/2"	59	0.7
	27"	7'-11"	4'- 4 1/2"	8'- 0"	9'- 2 3/4"	219	1.9	4'- 0 3/4"	68	0.9
	30"	8'- 7 3/4"	4'- 8"	8'- 9"	10'- 1 1/4"	254	2.2	4'- 5 3/4"	79	1.0
	33"	9'- 4 1/2"	4'-11 3/4"	9'- 6"	10'-11 3/4"	274	2.5	4'-10"	86	1.2
	36"	10'- 1 1/4"	5'- 3 1/4"	10'- 3"	11'-10"	305	2.9	5'- 3 1/4"	97	1.4
	42"	11'- 7"	5'-10 1/2"	11'- 9"	13'- 6 3/4"	371	3.7	6'- 0 1/2"	122	1.8
	48"	13'- 5 3/4"	6'- 5 3/4"	14'- 0"	16'- 2"	455	4.9	6'- 9 3/4"	152	2.4
	54"	14'-11 1/2"	7'- 1"	15'- 6"	17'-10 3/4"	532	5.9	7'- 9 1/4"	190	3.0
	60"	16'- 5"	7'- 8 1/4"	17'- 0"	19'- 7 1/2"	604	7.0	8'- 6 1/2"	224	3.5
	66"	17'-10 3/4"	8'- 3 1/2"	18'- 6"	21'- 4 1/4"	687	8.1	9'- 0 3/4"	248	4.0
	72"	19'- 4 1/4"	8'-10 3/4"	20'- 0"	23'- 1 1/4"	772	9.4	9'- 8"	281	4.6
4:1	12"	4'-11"	2'- 8 3/4"	5'- 8"	6'- 6 1/2"	132	0.9	1'- 9 3/4"	26	0.3
	15"	5'- 9 1/2"	3'- 0 1/4"	6'- 8"	7'- 8 1/2"	158	1.2	2'- 3"	33	0.4
	18"	6'- 8 1/4"	3'- 4"	7'- 8"	8'-10 1/4"	194	1.5	2'- 9 1/4"	43	0.6
	21"	7'- 6 3/4"	3'- 7 1/2"	8'- 8"	10'- 0"	226	1.8	3'- 2 1/4"	57	0.7
	24"	8'- 6 3/4"	4'- 0 3/4"	9'- 8"	11'- 2"	258	2.2	3'- 8 1/2"	68	0.9
	27"	9'- 5 1/4"	4'- 4 1/2"	10'- 8"	12'- 3 3/4"	286	2.6	4'- 0 3/4"	79	1.1
	30"	10'- 4"	4'- 8"	11'- 8"	13'- 5 3/4"	327	3.0	4'- 5 3/4"	91	1.3
	33"	11'- 2 1/2"	4'-11 3/4"	12'- 8"	14'- 7 1/2"	360	3.5	4'-10"	104	1.5
	36"	12'- 1"	5'- 3 1/4"	13'- 8"	15'- 9 1/4"	403	4.0	5'- 3 1/4"	115	1.7
	42"	13'-10"	5'-10 1/2"	15'- 8"	18'- 1"	487	5.1	6'- 0 1/2"	144	2.2
	48"	16'- 2 1/4"	6'- 5 3/4"	18'- 8"	21'- 6 3/4"	602	6.8	6'- 9 3/4"	183	3.0
	54"	17'-11 1/4"	7'- 1"	20'- 8"	23'-10 1/4"	717	8.2	7'- 9 1/4"	231	3.7
	60"	19'- 8 1/4"	7'- 8 1/4"	22'- 8"	26'- 2"	812	9.8	8'- 6 1/2"	270	4.4
	66"	21'- 5 1/2"	8'- 3 1/2"	24'- 8"	28'- 5 3/4"	933	11.4	9'- 0 3/4"	305	5.0
	72"	23'- 2 1/2"	8'-10 3/4"	26'- 8"	30'- 9 1/2"	1046	13.2	9'- 8"	342	5.7
6:1	12"	6'- 6 3/4"	2'- 8 3/4"	8'- 6"	9'- 9 3/4"	188	1.4	1'- 9 3/4"	30	0.4
	15"	7'- 8 3/4"	3'- 0 1/4"	10'- 0"	11'- 6 1/2"	226	1.9	2'- 3"	40	0.5
	18"	8'-10 3/4"	3'- 4"	11'- 6"	13'- 3 1/4"	277	2.4	2'- 9 1/4"	51	0.7
	21"	10'- 0 3/4"	3'- 7 1/2"	13'- 0"	15'- 0 1/4"	328	2.9	3'- 2 1/4"	69	1.0
	24"	11'- 4 1/4"	4'- 0 3/4"	14'- 6"	16'- 9"	371	3.5	3'- 8 1/2"	83	1.3
	27"	12'- 6 1/4"	4'- 4 1/2"	16'- 0"	18'- 5 3/4"	422	4.2	4'- 0 3/4"	98	1.5
	30"	13'- 8 1/4"	4'- 8"	17'- 6"	20'- 2 1/2"	482	4.9	4'- 5 3/4"	113	1.8
	33"	14'-10 1/4"	4'-11 3/4"	19'- 0"	21'-11 1/4"	543	5.7	4'-10"	130	2.0
	36"	16'- 0 1/4"	5'- 3 1/4"	20'- 6"	23'- 8"	598	6.5	5'- 3 1/4"	145	2.4
	42"	18'- 4 1/2"	5'-10 1/2"	23'- 6"	27'- 1 1/2"	732	8.4	6'- 0 1/2"	184	3.1
	48"	21'- 6 3/4"	6'- 5 3/4"	28'- 0"	32'- 4"	936	11.4	6'- 9 3/4"	240	4.1
	54"	23'-10 3/4"	7'- 1"	31'- 0"	35'- 9 1/2"	1112	13.8	7'- 9 1/4"	303	5.2
	60"	26'- 2 3/4"	7'- 8 1/4"	34'- 0"	39'- 3"	1266	16.4	8'- 6 1/2"	358	6.2

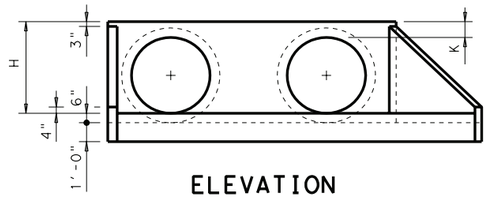

ELEVATION

Showing dimensions

1. Quantities shown are for concrete pipe and will increase slightly for metal pipe installations.
2. For vehicle safety, curbs shall project no more than 3" above finished grade. Curb heights shall be reduced, if necessary, to meet these requirements. No changes will be made in quantities and no additional compensation will be allowed for this work.
3. Provide a 1'-0" footing as shown where required to maintain 4" Min cover for pipes.
4. Quantities shown are for one structure end only (one headwall).
5. Min Length = 6" + 3" x $\left(\frac{12 \times H - 7}{12 \times L}\right)$

   Max Length = 12 x H - 3" x $\left(\frac{12 \times H - 7}{12 \times L}\right)$ - 1"
6. Lengths of wings based on SL:1 Slope along this line.

TABLE OF REINFORCING STEEL (4)

Bar	Size	Spa	No.
A	# 4	1'-0"	~
B	# 3	1'-6"	~
CL	# 4	1'-0"	~
CS	# 4	1'-0"	~
D	# 3	1'-0"	~
E	# 5	~	4
F	# 5	~	~
G	# 3	~	2
SL	# 4	~	3
SS	# 4	~	3
V	# 4	1'-0"	~
WL	# 5	~	2
WS	# 5	~	2

TABLE OF CONSTANT DIMENSIONS

DIA OF PIPE, D	G	K	H
12"	9"	1'- 0"	2'- 0"
15"	11"	1'- 0"	2'- 3"
18"	1'- 2"	1'- 0"	2'- 6"
21"	1'- 4"	1'- 0"	2'- 9"
24"	1'- 7"	1'- 0"	3'- 0"
27"	1'- 8"	1'- 0"	3'- 3"
30"	1'-10"	1'- 0"	3'- 6"
33"	1'-11"	1'- 0"	3'- 9"
36"	2'- 1"	1'- 0"	4'- 0"
42"	2'- 4"	1'- 0"	4'- 6"
48"	2'- 7"	1'- 3"	5'- 3"
54"	3'- 0"	1'- 3"	5'- 9"
60"	3'- 3"	1'- 3"	6'- 3"
66"	3'- 3"	1'- 3"	6'- 9"
72"	3'- 4"	1'- 3"	7'- 3"

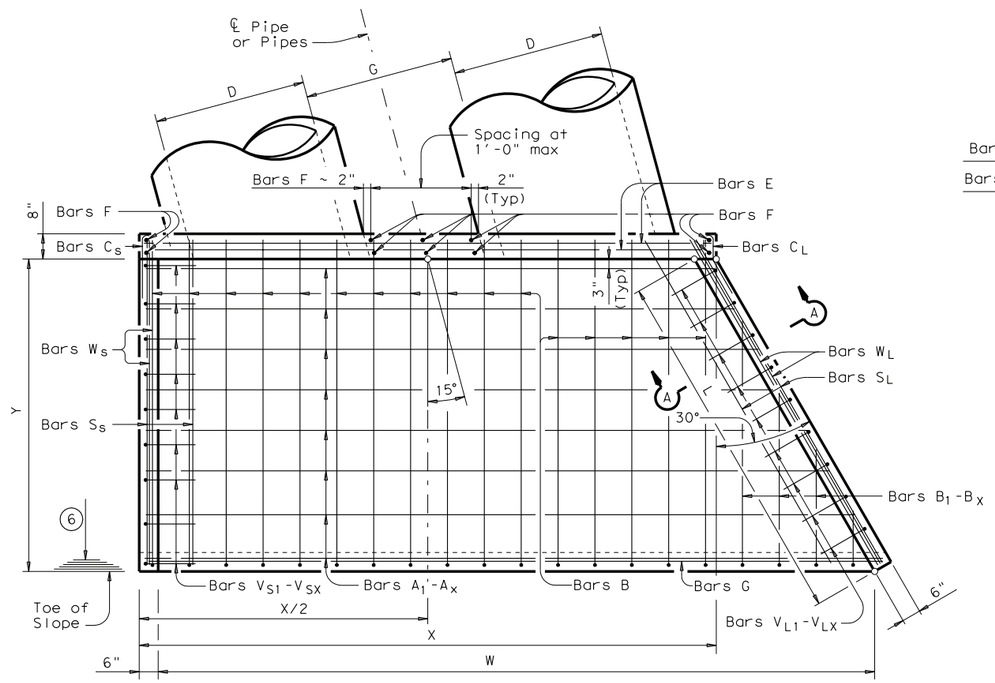

PLAN

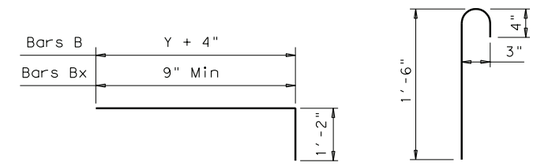

BARS B & B_1-B_X

BARS C_S
(2'-0" long)

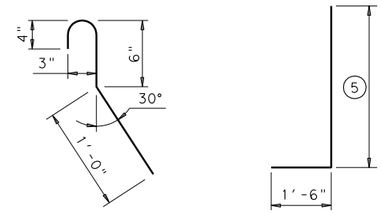

BARS C_L
(2'-0" long)

BARS V_S & V_L

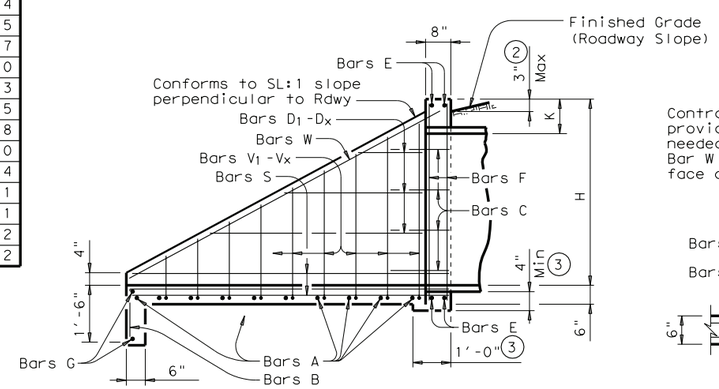

TYPICAL WING ELEVATION

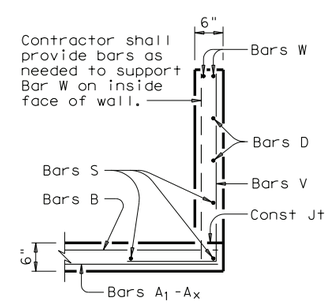

SECTION A-A

GENERAL NOTES:

Designed according to AASHTO LRFD Specifications.

Reinforcing steel shall be placed with the center of the outside layer of bars 2" from the surface of the concrete.

All reinforcing steel shall be Grade 60.

All concrete shall be Class "C" and shall have a minimum compressive strength of 3600 psi.

No bridge rails of any type may be mounted directly to these culvert headwalls.

DISCLAIMER:
The use of this standard is governed by the "Texas Engineering Practice Act". No warranty of any kind is made by TxDOT for any purpose whatsoever. TxDOT assumes no responsibility for the conversion of this standard to other formats or for incorrect results or damages resulting from its use.

ACC:

LEVELS DISPLAYED

1

Texas Department of Transportation
Bridge Division

CONCRETE HEADWALLS WITH FLARED WINGS FOR 15° SKEW PIPE CULVERTS

CH-FW-15

FILE: chfw15se.dgn	DN: TxDOT	CK: TxDOT	DW: TxDOT	CK: GAF
© TxDOT February 2010	DISTRICT	FEDERAL AID PROJECT		SHEET
REVISIONS	COUNTY	CONTROL	SECT	JOB	HIGHWAY

TABLE OF VARIABLE DIMENSIONS AND QUANTITIES FOR ONE HEADWALL (4)

SLOPE	DIA OF PIPE, D	Values for one Pipe						Values to be added for each addt'l Pipe		
		W	X	Y	L	Reinf (Lbs)	Conc (CY) (1)	X and W	Reinf (Lbs)	Conc (CY) (1)
2:1	12"	4'- 9"	3'- 1 1/2"	2'-10"	4'- 0"	90	0.6	2'- 0 1/4"	22	0.2
	15"	5'- 6 3/4"	3'- 5 1/4"	3'- 4"	4'- 8 1/2"	102	0.8	2'- 6"	28	0.3
	18"	6'- 4 3/4"	3'- 9 1/4"	3'-10"	5'- 5"	129	0.9	3'- 1"	41	0.4
	21"	7'- 2 3/4"	4'- 1 1/4"	4'- 4"	6'- 1 1/2"	144	1.1	3'- 6 3/4"	47	0.5
	24"	8'- 2 1/2"	4'- 7"	4'-10"	6'-10"	164	1.4	4'- 1 3/4"	57	0.6
	27"	9'- 0 1/2"	4'-11"	5'- 4"	7'- 6 1/2"	178	1.6	4'- 6 1/4"	62	0.7
	30"	9'-10 1/2"	5'- 3"	5'-10"	8'- 3"	212	1.8	5'- 0"	72	0.9
	33"	10'- 8 3/4"	5'- 7"	6'- 4"	8'-11 1/2"	225	2.1	5'- 4 3/4"	79	1.0
	36"	11'- 6 3/4"	5'-11 1/4"	6'-10"	9'- 8"	250	2.4	5'-10 1/2"	90	1.2
	42"	13'- 2 3/4"	6'- 7 1/4"	7'-10"	11'- 1"	304	3.0	6'- 8 3/4"	109	1.5
	48"	15'- 4 3/4"	7'- 3 1/4"	9'- 4"	13'- 2 1/2"	369	4.0	7'- 7 1/4"	142	2.0
	54"	17'- 1"	7'-11 1/2"	10'- 4"	14'- 7 1/4"	429	4.7	8'- 8"	170	2.5
	60"	18'- 9"	8'- 7 1/2"	11'- 4"	16'- 0 1/4"	484	5.6	9'- 6 1/4"	194	2.9
	66"	20'- 5"	9'- 3 1/2"	12'- 4"	17'- 5 1/4"	550	6.5	10'- 1 1/4"	217	3.3
	72"	22'- 1 1/4"	9'-11 3/4"	13'- 4"	18'-10 1/4"	614	7.5	10'- 9 1/4"	239	3.7
3:1	12"	6'- 2"	3'- 1 1/2"	4'- 3"	6'- 0"	118	0.9	2'- 0 1/4"	24	0.3
	15"	7'- 2 3/4"	3'- 5 1/4"	5'- 0"	7'- 0 3/4"	142	1.1	2'- 6"	31	0.4
	18"	8'- 3 3/4"	3'- 9 1/4"	5'- 9"	8'- 1 1/2"	179	1.4	3'- 1"	46	0.5
	21"	9'- 4 3/4"	4'- 1 1/4"	6'- 6"	9'- 2 1/4"	197	1.7	3'- 6 3/4"	53	0.7
	24"	10'- 7 1/2"	4'- 7"	7'- 3"	10'- 3"	227	2.1	4'- 1 3/4"	65	0.8
	27"	11'- 8 1/2"	4'-11"	8'- 0"	11'- 3 3/4"	255	2.4	4'- 6 1/4"	75	1.0
	30"	12'- 9 1/2"	5'- 3"	8'- 9"	12'- 4 1/2"	298	2.8	5'- 0"	86	1.2
	33"	13'-10 3/4"	5'- 7"	9'- 6"	13'- 5 1/4"	322	3.2	5'- 4 3/4"	94	1.3
	36"	14'-11 3/4"	5'-11 1/4"	10'- 3"	14'- 6"	355	3.7	5'-10 1/2"	108	1.5
	42"	17'- 1 3/4"	6'- 7 1/4"	11'- 9"	16'- 7 1/2"	441	4.6	6'- 8 3/4"	133	2.0
	48"	20'- 0 3/4"	7'- 3 1/4"	14'- 0"	19'- 9 1/2"	542	6.2	7'- 7 1/4"	176	2.7
	54"	22'- 3"	7'-11 1/2"	15'- 6"	21'-11"	626	7.5	8'- 8"	211	3.3
	60"	24'- 5"	8'- 7 1/2"	17'- 0"	24'- 0 1/2"	725	8.9	9'- 6 1/4"	246	3.9
	66"	26'- 7"	9'- 3 1/2"	18'- 6"	26'- 2"	821	10.4	10'- 1 1/4"	274	4.5
	72"	28'- 9 1/4"	9'-11 3/4"	20'- 0"	28'- 3 1/2"	930	12.0	10'- 9 1/4"	309	5.1
4:1	12"	7'- 7"	3'- 1 1/2"	5'- 8"	8'- 0 1/4"	156	1.2	2'- 0 1/4"	28	0.3
	15"	8'-10 3/4"	3'- 5 1/4"	6'- 8"	9'- 5 1/4"	183	1.5	2'- 6"	36	0.5
	18"	10'- 2 3/4"	3'- 9 1/4"	7'- 8"	10'-10"	228	1.9	3'- 1"	52	0.6
	21"	11'- 6 3/4"	4'- 1 1/4"	8'- 8"	12'- 3"	264	2.3	3'- 6 3/4"	63	0.8
	24"	13'- 0 1/2"	4'- 7"	9'- 8"	13'- 8"	301	2.8	4'- 1 3/4"	75	1.0
	27"	14'- 4 1/2"	4'-11"	10'- 8"	15'- 1"	339	3.4	4'- 6 1/4"	87	1.2
	30"	15'- 8 1/2"	5'- 3"	11'- 8"	16'- 6"	394	3.9	5'- 0"	99	1.4
	33"	17'- 0 3/4"	5'- 7"	12'- 8"	17'-11"	432	4.5	5'- 4 3/4"	112	1.7
	36"	18'- 4 3/4"	5'-11 1/4"	13'- 8"	19'- 4"	479	5.2	5'-10 1/2"	128	1.9
	42"	21'- 0 3/4"	6'- 7 1/4"	15'- 8"	22'- 1 3/4"	587	6.6	6'- 8 3/4"	158	2.5
	48"	24'- 8 3/4"	7'- 3 1/4"	18'- 8"	26'- 4 3/4"	738	8.9	7'- 7 1/4"	211	3.3
	54"	27'- 5"	7'-11 1/2"	20'- 8"	29'- 2 3/4"	871	10.8	8'- 8"	257	4.1
	60"	30'- 1"	8'- 7 1/2"	22'- 8"	32'- 0 3/4"	999	12.8	9'- 6 1/4"	297	4.9
	66"	32'- 9"	9'- 3 1/2"	24'- 8"	34'-10 1/2"	1139	14.9	10'- 1 1/4"	340	5.6
	72"	35'- 5 1/4"	9'-11 3/4"	26'- 8"	37'- 8 1/2"	1290	17.3	10'- 9 1/4"	378	6.4
6:1	12"	10'- 5"	3'- 1 1/2"	8'- 6"	12'- 0 1/4"	223	1.9	2'- 0 1/4"	32	0.4
	15"	12'- 2 3/4"	3'- 5 1/4"	10'- 0"	14'- 1 3/4"	273	2.5	2'- 6"	43	0.6
	18"	14'- 0 3/4"	3'- 9 1/4"	11'- 6"	16'- 3 1/4"	336	3.2	3'- 1"	61	0.8
	21"	15'-10 3/4"	4'- 1 1/4"	13'- 0"	18'- 4 1/2"	396	3.9	3'- 6 3/4"	76	1.1
	24"	17'-10 1/2"	4'- 7"	14'- 6"	20'- 6"	450	4.8	4'- 1 3/4"	91	1.4
	27"	19'- 8 1/2"	4'-11"	16'- 0"	22'- 7 1/2"	519	5.7	4'- 6 1/4"	108	1.6
	30"	21'- 6 1/2"	5'- 3"	17'- 6"	24'- 9"	595	6.6	5'- 0"	124	2.0
	33"	23'- 4 3/4"	5'- 7"	19'- 0"	26'-10 1/2"	674	7.7	5'- 4 3/4"	143	2.3
	36"	25'- 2 3/4"	5'-11 1/4"	20'- 6"	29'- 0"	737	8.8	5'-10 1/2"	162	2.7
	42"	28'-10 3/4"	6'- 7 1/4"	23'- 6"	33'- 2 3/4"	920	11.3	6'- 8 3/4"	202	3.5
	48"	34'- 0 3/4"	7'- 3 1/4"	28'- 0"	39'- 7 1/4"	1189	15.5	7'- 7 1/4"	274	4.6

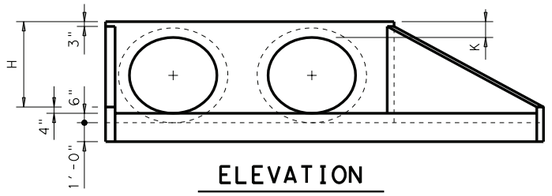

ELEVATION

Showing dimensions

1. Quantities shown are for concrete pipe and will increase slightly for metal pipe installations.
2. For vehicle safety, curbs shall project no more than 3" above finished grade. Curb heights shall be reduced, if necessary, to meet these requirements. No changes will be made in quantities and no additional compensation will be allowed for this work.
3. Provide a 1'-0" footing as shown where required to maintain 4" Min cover for pipes.
4. Quantities shown are for one structure end only (one headwall).
5. Min Length = 6" + 3" x $\left(\frac{12 \times H - 7}{12 \times L}\right)$

   Max Length = 12 x H - 3" x $\left(\frac{12 \times H - 7}{12 \times L}\right)$ - 1"
6. Lengths of wings based on SL:1 Slope along this line.

TABLE OF REINFORCING STEEL (4)

Bar	Size	Spa	No.
A	# 4	1'-0"	~
B	# 3	1'-6"	~
CL	# 4	1'-0"	~
CS	# 4	1'-0"	~
D	# 3	1'-0"	~
E	# 5	~	4
F	# 5	~	~
G	# 3	~	2
SL	# 4	~	3
SS	# 4	~	3
V	# 4	1'-0"	~
WL	# 5	~	2
WS	# 5	~	2

TABLE OF CONSTANT DIMENSIONS

DIA OF PIPE, D	G	K	H
12"	9"	1'- 0"	2'- 0"
15"	11"	1'- 0"	2'- 3"
18"	1'- 2"	1'- 0"	2'- 6"
21"	1'- 4"	1'- 0"	2'- 9"
24"	1'- 7"	1'- 0"	3'- 0"
27"	1'- 8"	1'- 0"	3'- 3"
30"	1'-10"	1'- 0"	3'- 6"
33"	1'-11"	1'- 0"	3'- 9"
36"	2'- 1"	1'- 0"	4'- 0"
42"	2'- 4"	1'- 0"	4'- 6"
48"	2'- 7"	1'- 3"	5'- 3"
54"	3'- 0"	1'- 3"	5'- 9"
60"	3'- 3"	1'- 3"	6'- 3"
66"	3'- 3"	1'- 3"	6'- 9"
72"	3'- 4"	1'- 3"	7'- 3"

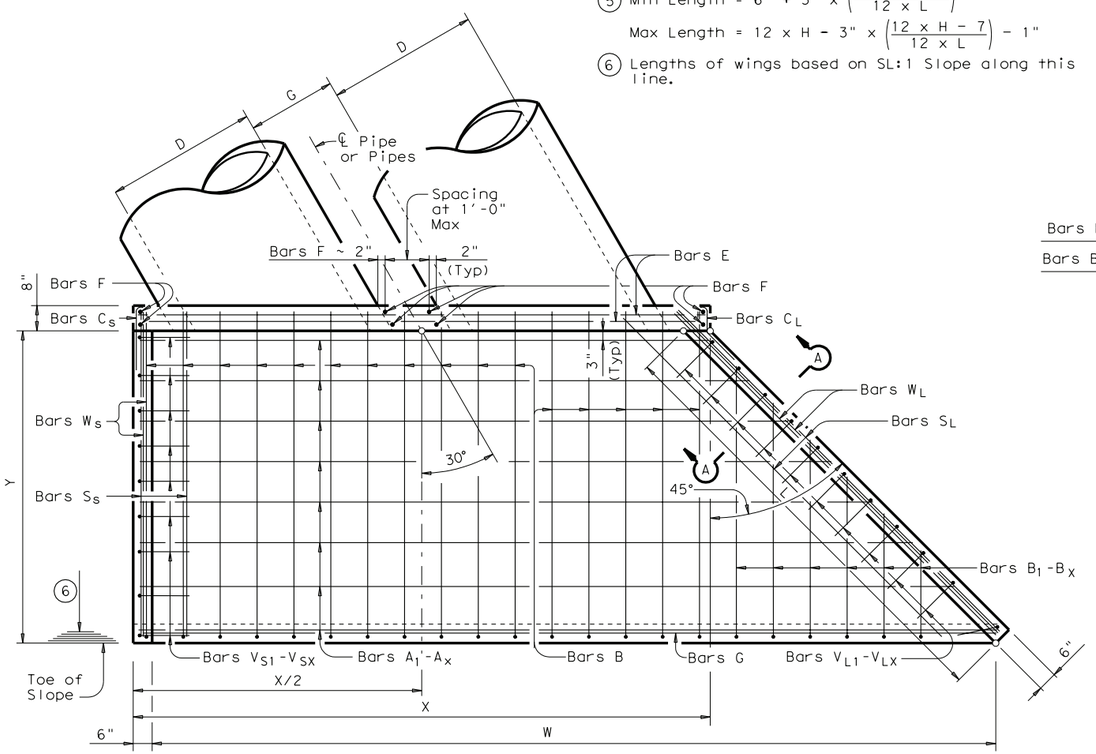

PLAN

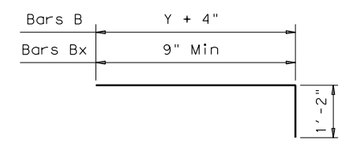

BARS B & B_1-B_X

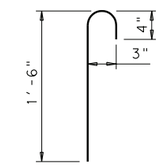

BARS C_S
(2'-0" long)

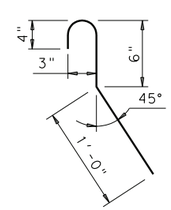

BARS C_L
(2'-0" long)

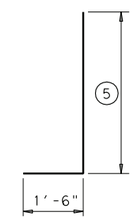

BARS V_S & V_L

GENERAL NOTES:

Designed according to AASHTO LRFD Specifications.

Reinforcing steel shall be placed with the center of the outside layer of bars 2" from the surface of the concrete.

All reinforcing steel shall be Grade 60.

All concrete shall be Class "C" and shall have a minimum compressive strength of 3600 psi.

No bridge rails of any type may be mounted directly to these culvert headwalls.

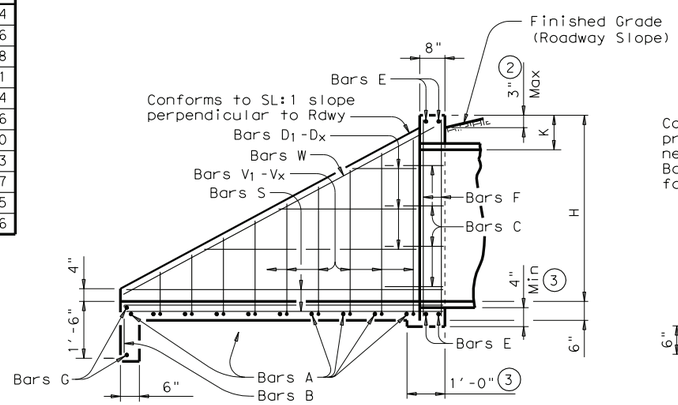

TYPICAL WING ELEVATION

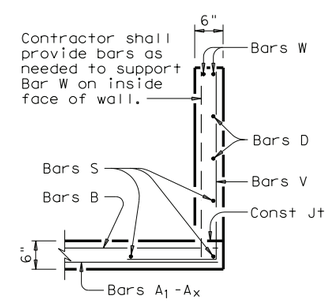

SECTION A-A

Texas Department of Transportation
Bridge Division

CONCRETE HEADWALLS WITH FLARED WINGS FOR 30° SKEW PIPE CULVERTS

CH-FW-30

FILE: chfw30se.dgn	DN: TxDOT	CK: TxDOT	DW: TxDOT	CK: GAF
© TxDOT February 2010	DISTRICT	FEDERAL AID PROJECT		SHEET
REVISIONS	COUNTY	CONTROL	SECT	JOB	HIGHWAY

DISCLAIMER:
The use of this standard is governed by the "Texas Engineering Practice Act". No warranty of any kind is made by TxDOT for any purpose whatsoever. TxDOT assumes no responsibility for the conversion of this standard to other formats or for incorrect results or damages resulting from its use.

ACC:

LEVELS DISPLAYED

TABLE OF VARIABLE DIMENSIONS AND QUANTITIES FOR ONE HEADWALL (4)

SLOPE	DIA OF PIPE, D	Values for one Pipe						Values to be added for each addt'l Pipe		
		W	X	Y	L	Reinf (Lbs)	Conc (CY) (1)	X and W	Reinf (Lbs)	Conc (CY) (1)
2:1	12"	7'- 7 3/4"	4'- 3"	2'-10"	5'- 8"	115	0.9	2'- 5 3/4"	26	0.3
	15"	8'-10 1/2"	4'- 7 1/4"	3'- 4"	6'- 8"	131	1.1	3'- 0 3/4"	32	0.4
	18"	10'- 1 1/4"	4'-11 1/2"	3'-10"	7'- 8"	163	1.3	3'- 9 1/4"	48	0.5
	21"	11'- 3 3/4"	5'- 3 3/4"	4'- 4"	8'- 8"	181	1.6	4'- 4 1/4"	54	0.6
	24"	12'- 6 1/2"	5'- 8"	4'-10"	9'- 8"	208	1.8	5'- 0 3/4"	67	0.8
	27"	13'- 9"	6'- 0 1/4"	5'- 4"	10'- 8"	225	2.1	5'- 6 1/2"	73	0.9
	30"	14'-11 3/4"	6'- 4 1/2"	5'-10"	11'- 8"	259	2.5	6'- 1 1/2"	86	1.1
	33"	16'- 3"	6'- 9 1/2"	6'- 4"	12'- 8"	284	2.8	6'- 7 1/4"	92	1.2
	36"	17'- 6 1/4"	7'- 2 1/4"	6'-10"	13'- 8"	316	3.2	7'- 2 1/4"	107	1.4
	42"	20'- 1"	8'- 0 1/4"	7'-10"	15'- 8"	383	4.0	8'- 3"	138	1.8
	48"	23'- 6"	8'-10 1/4"	9'- 4"	18'- 8"	468	5.4	9'- 3 3/4"	167	2.4
	54"	26'- 0 3/4"	9'- 8"	10'- 4"	20'- 8"	549	6.4	10'- 7 1/4"	198	3.0
	60"	28'- 7 1/2"	10'- 6"	11'- 4"	22'- 8"	620	7.5	11'- 8"	243	3.6
	66"	31'- 2 1/4"	11'- 3 3/4"	12'- 4"	24'- 8"	710	8.8	12'- 4 1/2"	269	4.0
	72"	33'- 8 3/4"	12'- 1 3/4"	13'- 4"	26'- 8"	789	10.1	13'- 2 1/2"	303	4.6
3:1	12"	10'- 1 1/4"	4'- 3"	4'- 3"	8'- 6"	154	1.3	2'- 5 3/4"	28	0.3
	15"	11'- 9 1/4"	4'- 7 1/4"	5'- 0"	10'- 0"	184	1.6	3'- 0 3/4"	37	0.5
	18"	13'- 5"	4'-11 1/2"	5'- 9"	11'- 6"	225	2.0	3'- 9 1/4"	55	0.6
	21"	15'- 0 3/4"	5'- 3 3/4"	6'- 6"	13'- 0"	254	2.4	4'- 4 1/4"	62	0.8
	24"	16'- 8 3/4"	5'- 8"	7'- 3"	14'- 6"	291	2.8	5'- 0 3/4"	77	1.0
	27"	18'- 4 1/2"	6'- 0 1/4"	8'- 0"	16'- 0"	329	3.3	5'- 6 1/2"	88	1.2
	30"	20'- 0 1/4"	6'- 4 1/2"	8'- 9"	17'- 6"	377	3.9	6'- 1 1/2"	103	1.4
	33"	21'- 8 3/4"	6'- 9 1/2"	9'- 6"	19'- 0"	413	4.4	6'- 7 1/4"	111	1.6
	36"	23'- 5 1/2"	7'- 2 1/4"	10'- 3"	20'- 6"	462	5.1	7'- 2 1/4"	126	1.9
	42"	26'-10 1/2"	8'- 0 1/4"	11'- 9"	23'- 6"	571	6.4	8'- 3"	168	2.4
	48"	31'- 7 1/4"	8'-10 1/4"	14'- 0"	28'- 0"	712	8.7	9'- 3 3/4"	210	3.2
	54"	35'- 0 1/4"	9'- 8"	15'- 6"	31'- 0"	830	10.5	10'- 7 1/4"	249	4.0
	60"	38'- 5 1/4"	10'- 6"	17'- 0"	34'- 0"	954	12.4	11'- 8"	306	4.8
	66"	41'-10 1/4"	11'- 3 3/4"	18'- 6"	37'- 0"	1092	14.5	12'- 4 1/2"	338	5.5
4:1	12"	12'- 6 3/4"	4'- 3"	5'- 8"	11'- 4"	203	1.7	2'- 5 3/4"	32	0.4
	15"	14'- 7 3/4"	4'- 7 1/4"	6'- 8"	13'- 4"	242	2.2	3'- 0 3/4"	43	0.6
	18"	16'- 8 3/4"	4'-11 1/2"	7'- 8"	15'- 4"	296	2.8	3'- 9 1/4"	61	0.8
	21"	18'- 9 3/4"	5'- 3 3/4"	8'- 8"	17'- 4"	343	3.4	4'- 4 1/4"	73	1.0
	24"	20'-10 3/4"	5'- 8"	9'- 8"	19'- 4"	394	4.0	5'- 0 3/4"	90	1.3
	27"	23'- 0"	6'- 0 1/4"	10'- 8"	21'- 4"	445	4.8	5'- 6 1/2"	103	1.5
	30"	25'- 1"	6'- 4 1/2"	11'- 8"	23'- 4"	510	5.5	6'- 1 1/2"	120	1.8
	33"	27'- 2 3/4"	6'- 9 1/2"	12'- 8"	25'- 4"	572	6.4	6'- 7 1/4"	134	2.0
	36"	29'- 4 1/2"	7'- 2 1/4"	13'- 8"	27'- 4"	631	7.3	7'- 2 1/4"	152	2.4
	42"	33'- 8"	8'- 0 1/4"	15'- 8"	31'- 4"	781	9.4	8'- 3"	198	3.0
	48"	39'- 8"	8'-10 1/4"	18'- 8"	37'- 4"	991	12.8	9'- 3 3/4"	255	4.0
6:1	12"	17'- 5 3/4"	4'- 3"	8'- 6"	17'- 0"	295	2.9	2'- 5 3/4"	38	0.5
	15"	20'- 5"	4'- 7 1/4"	10'- 0"	20'- 0"	367	3.7	3'- 0 3/4"	51	0.8
	18"	23'- 4 1/2"	4'-11 1/2"	11'- 6"	23'- 0"	445	4.7	3'- 9 1/4"	73	1.0
	21"	26'- 4"	5'- 3 3/4"	13'- 0"	26'- 0"	531	5.8	4'- 4 1/4"	89	1.3
	24"	29'- 3 1/4"	5'- 8"	14'- 6"	29'- 0"	605	7.0	5'- 0 3/4"	110	1.7
	27"	32'- 2 3/4"	6'- 0 1/4"	16'- 0"	32'- 0"	702	8.3	5'- 6 1/2"	129	2.0
	30"	35'- 2 1/4"	6'- 4 1/2"	17'- 6"	35'- 0"	801	9.7	6'- 1 1/2"	150	2.4
	33"	38'- 2 1/4"	6'- 9 1/2"	19'- 0"	38'- 0"	913	11.3	6'- 7 1/4"	170	2.8

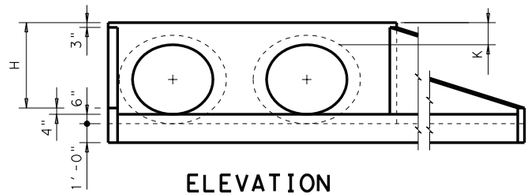

ELEVATION

Showing dimensions

1. Quantities shown are for concrete pipe and will increase slightly for metal pipe installations.
2. For vehicle safety, curbs shall project no more than 3" above finished grade. Curb heights shall be reduced, if necessary, to meet these requirements. No changes will be made in quantities and no additional compensation will be allowed for this work.
3. Provide a 1'-0" footing as shown where required to maintain 4" Min cover for pipes.
4. Quantities shown are for one structure end only (one headwall).
5. Min Length = 6" + 3" x $\left(\frac{12 \times H - 7}{12 \times L}\right)$

   Max Length = 12 x H - 3" x $\left(\frac{12 \times H - 7}{12 \times L}\right)$ - 1"
6. Lengths of wings based on SL:1 Slope along this line.

TABLE OF REINFORCING STEEL (4)

Bar	Size	Spa	No.
A	# 4	1'-0"	~
B	# 3	1'-6"	~
CL	# 4	1'-0"	~
CS	# 4	1'-0"	~
D	# 3	1'-0"	~
E	# 5	~	4
F	# 5	~	~
G	# 3	~	2
SL	# 4	~	3
SS	# 4	~	3
V	# 4	1'-0"	~
WL	# 5	~	2
WS	# 5	~	2

TABLE OF CONSTANT DIMENSIONS

DIA OF PIPE, D	G	K	H
12"	9"	1'- 0"	2'- 0"
15"	11"	1'- 0"	2'- 3"
18"	1'- 2"	1'- 0"	2'- 6"
21"	1'- 4"	1'- 0"	2'- 9"
24"	1'- 7"	1'- 0"	3'- 0"
27"	1'- 8"	1'- 0"	3'- 3"
30"	1'-10"	1'- 0"	3'- 6"
33"	1'-11"	1'- 0"	3'- 9"
36"	2'- 1"	1'- 0"	4'- 0"
42"	2'- 4"	1'- 0"	4'- 6"
48"	2'- 7"	1'- 3"	5'- 3"
54"	3'- 0"	1'- 3"	5'- 9"
60"	3'- 3"	1'- 3"	6'- 3"
66"	3'- 3"	1'- 3"	6'- 9"
72"	3'- 4"	1'- 3"	7'- 3"

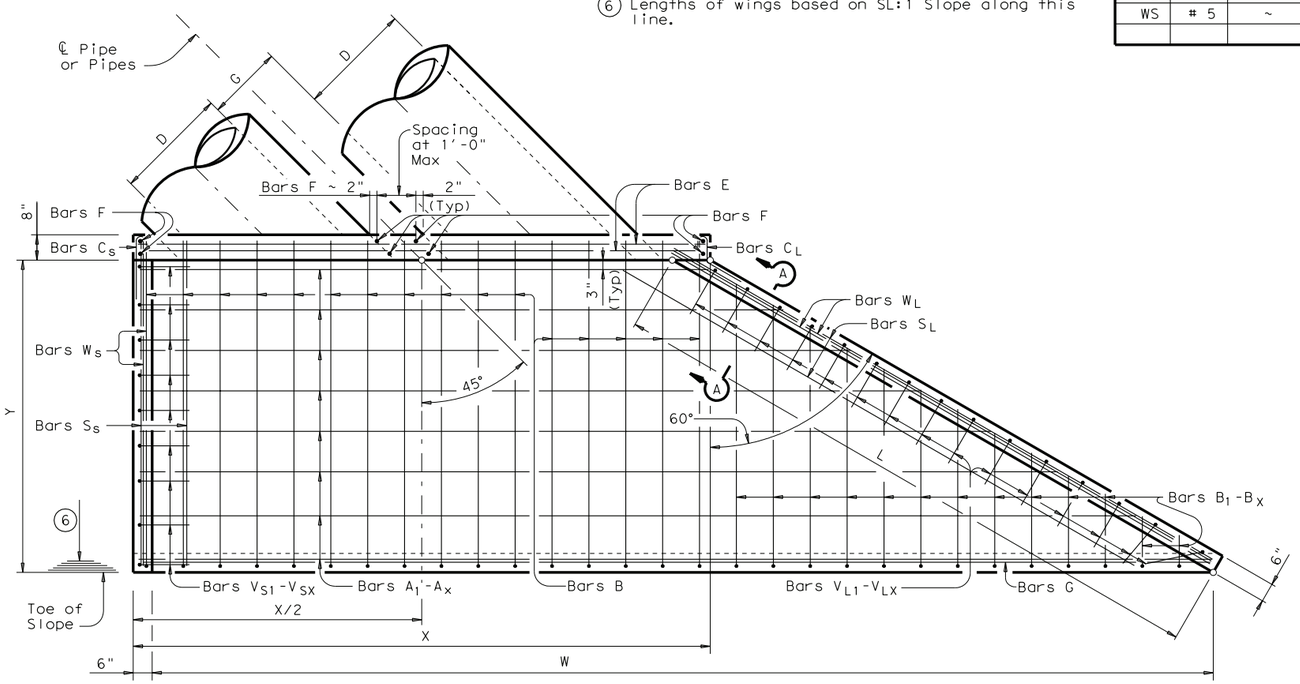

PLAN

GENERAL NOTES:

Designed according to AASHTO LRFD Specifications.

Reinforcing steel shall be placed with the center of the outside layer of bars 2" from the surface of the concrete.

All reinforcing steel shall be Grade 60.

All concrete shall be Class "C" and shall have a minimum compressive strength of 3600 psi.

No bridge rails of any type may be mounted directly to these culvert headwalls.

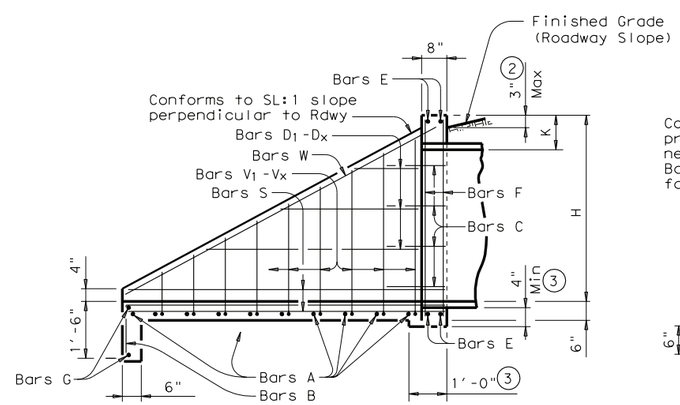

TYPICAL WING ELEVATION

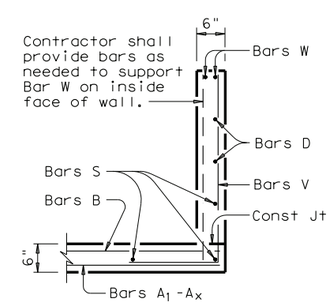

SECTION A-A

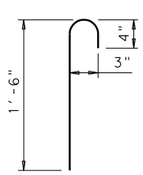

BARS C_S
(2'-0" long)

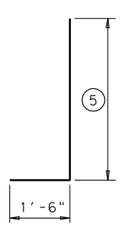

BARS V_S & V_L

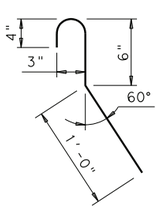

BARS C_L
(2'-0" long)

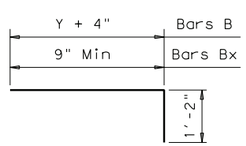

BARS B & B_1-B_X

DISCLAIMER:
The use of this standard is governed by the "Texas Engineering Practice Act". No warranty of any kind is made by TxDOT for any purpose whatsoever. TxDOT assumes no responsibility for the conversion of this standard to other formats or for incorrect results or damages resulting from its use.

ACC:

LEVELS DISPLAYED

Texas Department of Transportation
Bridge Division

CONCRETE HEADWALLS WITH FLARED WINGS FOR 45° SKEW PIPE CULVERTS

CH-FW-45

FILE: chfw45se.dgn	DN: TxDOT	CK: TxDOT	DW: TxDOT	CK: GAF
© TxDOT February 2010	DISTRICT	FEDERAL AID PROJECT		SHEET
REVISIONS				
	COUNTY	CONTROL	SECT	JOB	HIGHWAY

TABLE OF DIMENSIONS & REINFORCING STEEL
(Wings for One Structure End)

Dimensions					Variable Reinforcing				Estimated Quantities per ft of wing length (2~Wings) (3)	
Maximum Wingwall Height Hw	W	X	Y	Z	Bars J1		Bars J2			
					Size	Spa	Size	Spa	Reinf (Lb/Ft)	Conc (CY/Ft)
2'-6"	2'- 5"	1'- 0"	9"	7"	#4	1'-0"	#4	1'-0"	33.73	0.248
3'-0"	2'- 5"	1'- 0"	9"	7"	#4	1'-0"	#4	1'-0"	37.07	0.261
3'-6"	2'- 5"	1'- 0"	9"	7"	#4	1'-0"	#4	1'-0"	37.74	0.273
4'-0"	2'- 5"	1'- 0"	9"	7"	#4	1'-0"	#4	1'-0"	38.41	0.285
4'-6"	3'- 2"	1'- 6"	1'- 0"	7"	#4	1'-0"	#4	1'-0"	41.75	0.330
5'-0"	3'- 2"	1'- 6"	1'- 0"	7"	#4	1'-0"	#4	1'-0"	45.09	0.343
5'-6"	3'- 2"	1'- 6"	1'- 0"	7"	#4	1'-0"	#4	1'-0"	45.75	0.355
6'-0"	3'- 2"	1'- 6"	1'- 0"	7"	#4	1'-0"	#4	1'-0"	46.42	0.367
7'-0"	3'- 8"	1'- 9"	1'- 3"	7"	#4	1'-0"	#4	1'-0"	52.77	0.414
8'-0"	4'- 2"	2'- 0"	1'- 6"	8"	#5	1'-0"	#4	1'-0"	60.19	0.486
9'-0"	4'- 8"	2'- 3"	1'- 9"	8"	#4	6"	#4	6"	81.49	0.535
10'-0"	5'- 2"	2'- 6"	2'- 0"	8"	#5	6"	#4	6"	97.25	0.584
11'-0"	5'- 8"	2'- 9"	2'- 3"	8"	#6	6"	#5	6"	133.65	0.634
12'-0"	6'- 2"	3'- 0"	2'- 6"	9"	#7	6"	#5	6"	162.29	0.721
13'-0"	6'- 8"	3'- 3"	2'- 9"	11"	#7	6"	#5	6"	178.80	0.856
14'-0"	7'- 2"	3'- 6"	3'- 0"	1'- 0"	#8	6"	#5	6"	216.78	0.959
15'-0"	7'- 8"	4'- 0"	3'- 0"	1'- 1"	#9	6"	#6	6"	283.06	1.068
16'-0"	8'- 2"	4'- 6"	3'- 0"	1'- 3"	#9	6"	#6	6"	297.02	1.234

TABLE OF WINGWALL REINFORCING (2~Wings)

Bar	Size	No.	Spa
D	#5	~	1'-0"
E	#4	~	1'-0"
F	#4	~	1'-0"
G	#6	4	~
M	#4	4	~
P	#4	~	1'-0"
R	#5	6	~
V	#4	~	1'-0"

TABLE OF ESTIMATED CULVERT TOEWALL QUANTITIES

Bar	Size	No.	Spa
L	#4	~	1'-6"
Q	#4	1	~
Reinf (Lb/Ft)			2.45
Conc (CY/Ft)			0.037

WING DIMENSION CALCULATIONS:

Formulas: (All values are in Feet)

Hw = H + T + C - 0.250'

Lw = (Hw - 0.333') (SL)

For Cast-in-place culverts:

Ltw = (N) (S) + (N + 1) (U)

For Precast culverts:

Ltw = (N) (2U + S) + (N - 1) (0.5')

Total Wingwall Area (Two Wings ~ S.F.) = (Hw + 0.333') (Lw)

Hw = Height of Wingwall
SL:1 = Side Slope Ratio (Horizontal:1 Vertical)
Lw = Length of Wingwall
Ltw = Culvert Toewall Length
N = Number of Culvert Spans

See applicable box culvert standard for H, S, T, and U values.

(1) Extend Bars P 3'-0" minimum into bottom slab of Box Culvert.

(2) Adjust to fit as necessary to maintain 1 ¼" clear cover and 4" minimum between bars.

(3) Quantities shown are based on an average wing height for two wings (one structure end). To determine total quantities for two wings multiply the tabulated values by Lw.

(4) Recommended values of Slope are: 2:1, 3:1, 4:1, & 6:1.

(5) When shown elsewhere on the plans, a 5" deep concrete riprap shall be constructed. Payment for riprap shall be as required by Item 432, "Riprap". Unless otherwise shown on the plans or directed by the Engineer, the riprap shall have a 6" wide by 1'-6" deep reinforced concrete toewall along all edges adjacent to natural ground; the toewall shall be reinforced by extending typical riprap reinforcing into the toewall; construction joints or grooved joints, oriented in the direction of flow, shall extend across the full distance of the riprap, at intervals of approximately 20'. When such riprap is provided, the culvert toewall shown in SECTION B-B will not be required.

(6) At Contractor's option, Culvert Toewall may be ended flush with Wingwall Toewall. Adjust reinforcing from that shown as necessary.

(7) 0" min to 5'-0" max. Estimated curb heights are shown elsewhere in the plans. For structures with pedestrian rail, bicycle rail or curbs taller than 1'-0", refer to ECD standard. For structures with T6 bridge rail, refer to T6-CM standard. For structures with traffic rail, other than T6, refer to RAC standard.

(8) For vehicle safety, curb heights and wall heights shall be reduced, if necessary, to provide a maximum 3" projection above finished grade. No changes will be made in quantities and no additional compensation will be allowed for this work.

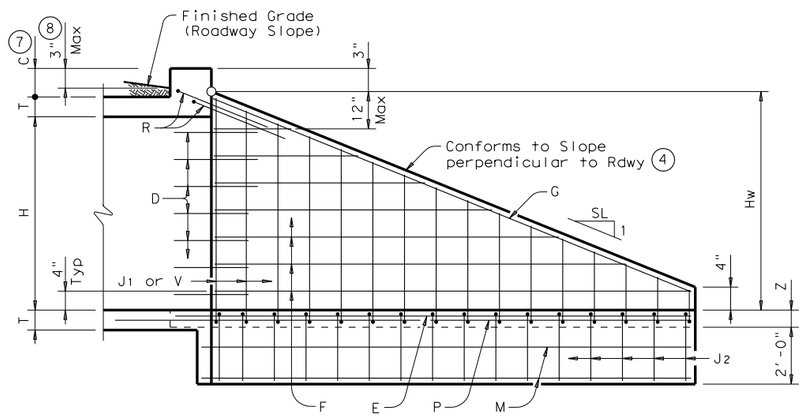

INSIDE ELEVATION
(Showing reinforcing. Culvert and Culvert Toewall reinforcing not shown for clarity.)

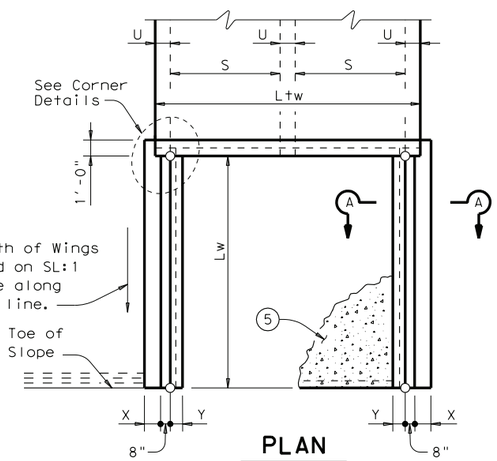

PLAN
(Showing Dimensions)

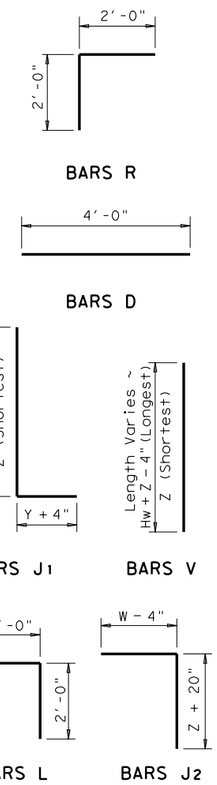

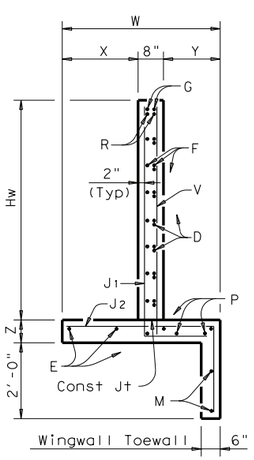

SECTION A-A

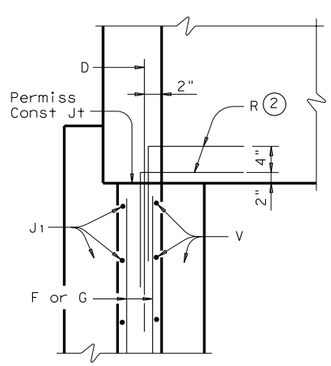

WINGWALL

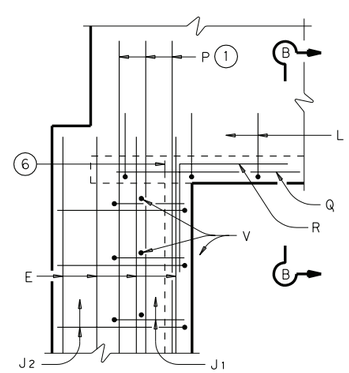

FOOTING AND TOEWALL

CORNER DETAILS
(Culvert and Culvert Toewall reinforcing not shown for clarity.)

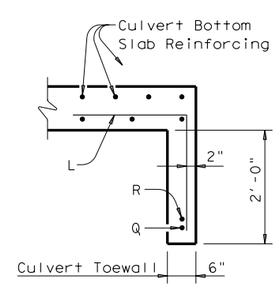

SECTION B-B (5)

GENERAL NOTES:

Designed according to AASHTO LRFD Specifications.
All reinforcing steel shall be Grade 60.
All concrete shall be Class "C" and shall have a minimum compressive strength of 3600 psi.
All reinforcing bars shall be adjusted to provide a minimum of 1 ¼" clear cover.
When structure is found on solid rock, depth of toewalls for culverts and wingwalls may be reduced or eliminated as directed by the Engineer.
See BCS sheet for additional dimensions and information.
The quantities for concrete and reinforcing steel resulting from the formulas given on this sheet are for Contractor's information only.

DISCLAIMER:
The use of this standard is governed by the "Texas Engineering Practice Act". No warranty of any kind is made by TxDOT for any purpose whatsoever. TxDOT assumes no responsibility for the conversion of this standard to other formats or for incorrect results or damages resulting from its use.

COMMENTS:

LEVELS DISPLAYED

Texas Department of Transportation
Bridge Division

CONCRETE WINGWALLS WITH STRAIGHT WINGS FOR 0° SKEW BOX CULVERTS

SW-0

FILE: sw-0stde.dgn	DN: GAF	CK: CAT	DW: TxDOT	CK: GAF
© TxDOT February 2010	DISTRICT	FEDERAL AID PROJECT		SHEET
REVISIONS				
	COUNTY	CONTROL	SECT	JOB	HIGHWAY

TABLE OF DIMENSIONS & REINFORCING STEEL
(Wings for One Structure End)

Dimensions					Variable Reinforcing				Estimated Quantities per ft of wing length (2~Wings) (3)	
					Bars J1		Bars J2			
Maximum Wingwall Height Hw	W	X	Y	Z	Size	Spa	Size	Spa	Reinf (Lb/Ft)	Conc (CY/Ft)
2'-6"	2'- 5"	1'- 0"	9"	7"	#4	1'-0"	#4	1'-0"	33.73	0.248
3'-0"	2'- 5"	1'- 0"	9"	7"	#4	1'-0"	#4	1'-0"	37.07	0.261
3'-6"	2'- 5"	1'- 0"	9"	7"	#4	1'-0"	#4	1'-0"	37.74	0.273
4'-0"	2'- 5"	1'- 0"	9"	7"	#4	1'-0"	#4	1'-0"	38.41	0.285
4'-6"	3'- 2"	1'- 6"	1'- 0"	7"	#4	1'-0"	#4	1'-0"	41.75	0.330
5'-0"	3'- 2"	1'- 6"	1'- 0"	7"	#4	1'-0"	#4	1'-0"	45.09	0.343
5'-6"	3'- 2"	1'- 6"	1'- 0"	7"	#4	1'-0"	#4	1'-0"	45.75	0.355
6'-0"	3'- 2"	1'- 6"	1'- 0"	7"	#4	1'-0"	#4	1'-0"	46.42	0.367
7'-0"	3'- 8"	1'- 9"	1'- 3"	7"	#4	1'-0"	#4	1'-0"	52.77	0.414
8'-0"	4'- 2"	2'- 0"	1'- 6"	8"	#5	1'-0"	#4	1'-0"	60.19	0.486
9'-0"	4'- 8"	2'- 3"	1'- 9"	8"	#4	6"	#4	6"	81.49	0.535
10'-0"	5'- 2"	2'- 6"	2'- 0"	8"	#5	6"	#4	6"	97.25	0.584
11'-0"	5'- 8"	2'- 9"	2'- 3"	8"	#6	6"	#5	6"	133.65	0.634
12'-0"	6'- 2"	3'- 0"	2'- 6"	9"	#7	6"	#5	6"	162.29	0.721
13'-0"	6'- 8"	3'- 3"	2'- 9"	11"	#7	6"	#5	6"	178.80	0.856
14'-0"	7'- 2"	3'- 6"	3'- 0"	1'- 0"	#8	6"	#5	6"	216.78	0.959
15'-0"	7'- 8"	4'- 0"	3'- 0"	1'- 1"	#9	6"	#6	6"	283.06	1.068
16'-0"	8'- 2"	4'- 6"	3'- 0"	1'- 3"	#9	6"	#6	6"	297.02	1.234

TABLE OF WINGWALL REINFORCING (2~Wings)

Bar	Size	No.	Spa
D	#5	~	1'-0"
E	#4	~	1'-0"
F	#4	~	1'-0"
G	#6	4	~
M	#4	4	~
P	#4	~	1'-0"
R	#5	6	~
V	#4	~	1'-0"

TABLE OF ESTIMATED CULVERT TOEWALL QUANTITIES

Bar	Size	No.	Spa
L	#4	~	1'-6"
Q	#4	1	~
Reinf (Lb/Ft)			2.45
Conc (CY/Ft)			0.037

WING DIMENSION CALCULATIONS:

Formulas: (All values are in Feet)

Hw = H + T + C − 0.250'

A = (Hw − 0.333') (SL)

B = (A) Tangent (30°)

Lw = (A) ÷ Cosine (30°)

For Cast-in-place culverts:

Ltw = (N) (S) + (N + 1) (U)

For Precast culverts:

Ltw = (N) (2U + S) + (N − 1) (0.500')

Total Wingwall Area (Two Wings ~ S.F.) = (Hw + 0.333') (Lw)

Hw = Height of Wingwall
SL:1 = Side Slope Ratio (Horizontal:1 Vertical)
Lw = Length of Wingwall
Ltw = Culvert Toewall Length
N = Number of Culvert Spans

See applicable box culvert standard for H, S, T, and U values.

1. Extend Bars P 3'-0" minimum into bottom slab of Box Culvert.
2. Adjust to fit as necessary to maintain 1 ¼" clear cover and 4" minimum between bars.
3. Quantities shown are based on an average wing height for two wings (one structure end). To determine total quantities for two wings multiply the tabulated values by Lw.
4. Recommended values of Slope are: 2:1, 3:1, 4:1, & 6:1.
5. When shown elsewhere on the plans, a 5" deep concrete riprap shall be constructed. Payment for riprap shall be as required by Item 432, "Riprap". Unless otherwise shown on the plans or directed by the Engineer, the riprap shall have a 6" wide by 1'-6" deep reinforced concrete toewall along all edges adjacent to natural ground; the toewall shall be reinforced by extending typical riprap reinforcing into the toewall; construction joints or grooved joints, oriented in the direction of flow, shall extend across the full distance of the riprap, at intervals of approximately 20'. When such riprap is provided, the culvert toewall shown in SECTION B-B will not be required.
6. At Contractor's option, Culvert Toewall may be ended flush with Wingwall Toewall. Adjust reinforcing from that shown as necessary.
7. 0" min to 5'-0" max. Estimated curb heights are shown elsewhere in the plans. For structures with pedestrian rail, bicycle rail or curbs taller than 1'-0", refer to ECD standard. For structures with T6 bridge rail, refer to T6-CM standard. For structures with traffic rail, other than T6, refer to RAC standard.
8. For vehicle safety, curb heights and wall heights shall be reduced, if necessary, to provide a maximum 3" projection above finished grade. No changes will be made in quantities and no additional compensation will be allowed for this work.

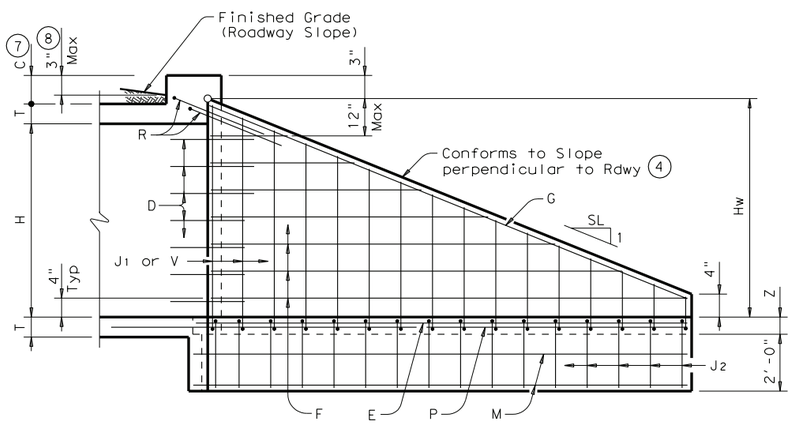

INSIDE ELEVATION

(Showing reinforcing. Culvert and Culvert Toewall reinforcing not shown for clarity.)

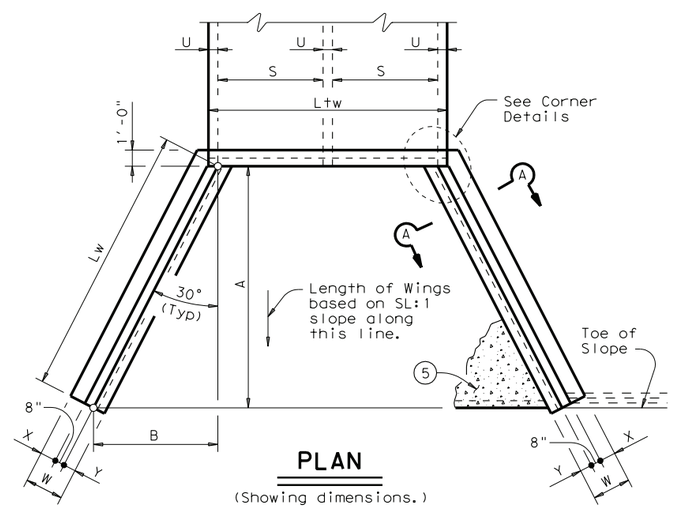

PLAN

(Showing dimensions.)

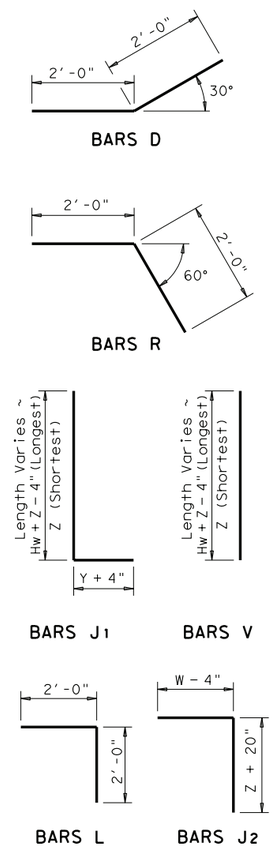

GENERAL NOTES:

Designed according to AASHTO LRFD Specifications.
All reinforcing steel shall be Grade 60.
All concrete shall be Class "C" and shall have a minimum compressive strength of 3600 psi.
All reinforcing bars shall be adjusted to provide a minimum of 1 ¼" clear cover.
When structure is founded on solid rock, depth of toewalls for culverts and wingwalls may be reduced or eliminated as directed by the Engineer.
See BCS sheet for additional dimensions and information.
The quantities for concrete and reinforcing steel resulting from the formulas given on this sheet are for Contractor's information only.

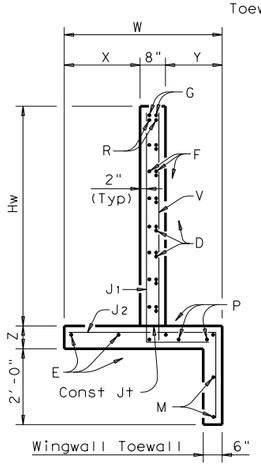

SECTION A-A

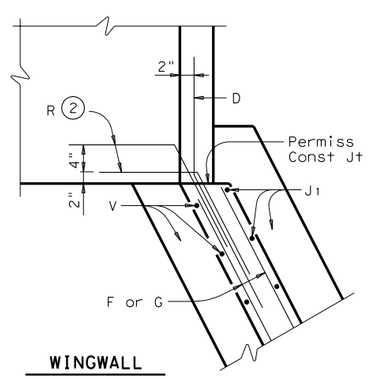

WINGWALL

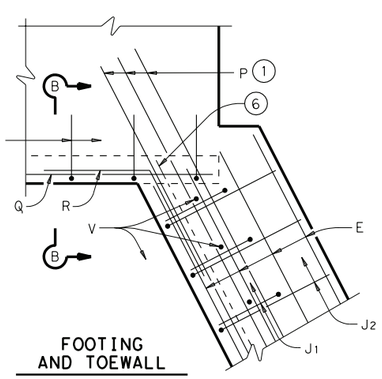

FOOTING AND TOEWALL

CORNER DETAILS

(Culvert and Culvert Toewall reinforcing not shown for clarity.)

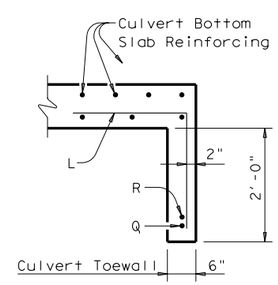

SECTION B-B (5)

DISCLAIMER:
The use of this standard is governed by the "Texas Engineering Practice Act". No warranty of any kind is made by TxDOT for any purpose whatsoever. TxDOT assumes no responsibility for the conversion of this standard to other formats or for incorrect results or damages resulting from its use.

COMMENTS:

LEVELS DISPLAYED

Texas Department of Transportation
Bridge Division

CONCRETE WINGWALLS WITH FLARED WINGS FOR 0° SKEW BOX CULVERTS

FW-0

FILE: fw-0stde.dgn	DN: GAF	CK: CAT	DW: TxDOT	CK: GAF
©TxDOT February 2010	DISTRICT	FEDERAL AID PROJECT		SHEET
REVISIONS				
	COUNTY	CONTROL	SECT	JOB	HIGHWAY

TABLE OF DIMENSIONS & REINFORCING STEEL
(Wings for One Structure End)

Dimensions					Variable Reinforcing				Estimated Quantities (3) per ft of wing length (2~Wings)	
					Bars J1		Bars J2			
Maximum Wingwall Height Hw	W	X	Y	Z	Size	Spa	Size	Spa	Reinf (Lb/Ft)	Conc (CY/Ft)
2'-6"	2'- 5"	1'- 0"	9"	7"	#4	1'-0"	#4	1'-0"	33.73	0.248
3'-0"	2'- 5"	1'- 0"	9"	7"	#4	1'-0"	#4	1'-0"	37.07	0.261
3'-6"	2'- 5"	1'- 0"	9"	7"	#4	1'-0"	#4	1'-0"	37.74	0.273
4'-0"	2'- 5"	1'- 0"	9"	7"	#4	1'-0"	#4	1'-0"	38.41	0.285
4'-6"	3'- 2"	1'- 6"	1'- 0"	7"	#4	1'-0"	#4	1'-0"	41.75	0.330
5'-0"	3'- 2"	1'- 6"	1'- 0"	7"	#4	1'-0"	#4	1'-0"	45.09	0.343
5'-6"	3'- 2"	1'- 6"	1'- 0"	7"	#4	1'-0"	#4	1'-0"	45.75	0.355
6'-0"	3'- 2"	1'- 6"	1'- 0"	7"	#4	1'-0"	#4	1'-0"	46.42	0.367
7'-0"	3'- 8"	1'- 9"	1'- 3"	7"	#4	1'-0"	#4	1'-0"	52.77	0.414
8'-0"	4'- 2"	2'- 0"	1'- 6"	8"	#5	1'-0"	#4	1'-0"	60.19	0.486
9'-0"	4'- 8"	2'- 3"	1'- 9"	8"	#4	6"	#4	6"	81.49	0.535
10'-0"	5'- 2"	2'- 6"	2'- 0"	8"	#5	6"	#4	6"	97.25	0.584
11'-0"	5'- 8"	2'- 9"	2'- 3"	8"	#6	6"	#5	6"	133.65	0.634
12'-0"	6'- 2"	3'- 0"	2'- 6"	9"	#7	6"	#5	6"	162.29	0.721
13'-0"	6'- 8"	3'- 3"	2'- 9"	11"	#7	6"	#5	6"	178.80	0.856
14'-0"	7'- 2"	3'- 6"	3'- 0"	1'- 0"	#8	6"	#5	6"	216.78	0.959
15'-0"	7'- 8"	4'- 0"	3'- 0"	1'- 1"	#9	6"	#6	6"	283.06	1.068
16'-0"	8'- 2"	4'- 6"	3'- 0"	1'- 3"	#9	6"	#6	6"	297.02	1.234

TABLE OF WINGWALL REINFORCING (2~Wings)

Bar	Size	No.	Spa
DL	#5	~	1'-0"
DS	#5	~	1'-0"
E	#4	~	1'-0"
F	#4	~	1'-0"
G	#6	4	~
M	#4	4	~
P	#4	~	1'-0"
RS	#5	3	~
RL	#5	3	~
V	#4	~	1'-0"

TABLE OF ESTIMATED CULVERT TOEWALL QUANTITIES

Bar	Size	No.	Spa
L	#4	~	1'-6"
Q	#4	1	~
Reinf (Lb/Ft)			2.45
Conc (CY/Ft)			0.037

WING DIMENSION CALCULATIONS:

Formulas: (All values are in Feet)

Hw = H + T + C - 0.250'

A = (Hw - 0.333') (SL)

B = (A) [Tangent (θ + 15°)]

Lw = (A) ÷ [Cosine (θ + 15°)]

For Cast-in-place culverts:

Ltw = [(N) (S) + (N + 1) (U)] ÷ (Cosine θ)

For Precast culverts:

Ltw = [(N) (2U + S) + (N - 1) (0.500')] ÷ (Cosine θ)

Total Wingwall Area (Two Wings ~ S.F.) =
(0.5) (Hw + 0.333') (Lw + A)

Hw = Height of Wingwall
SL:1 = Side Slope Ratio (Horizontal:1 Vertical)
A = Length of Short Wingwall
Lw = Length of Long Wingwall
Ltw = Culvert Toewall Length
N = Number of Culvert Spans
θ = Culvert Skew

See applicable box culvert standard for H, S, T, and U values.

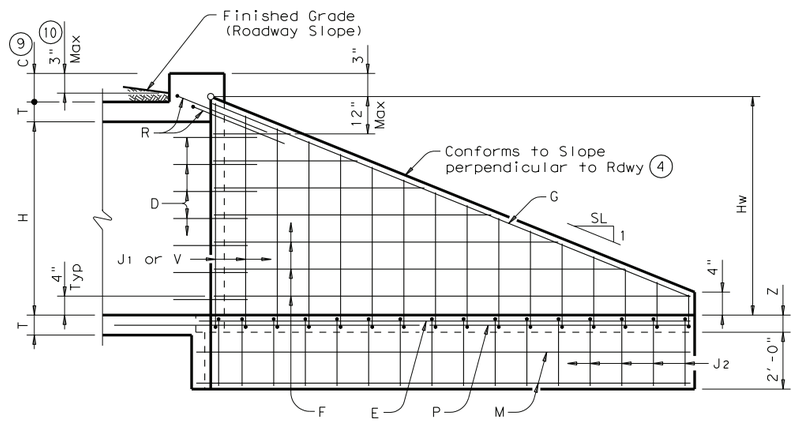

INSIDE ELEVATION
(Showing reinforcing. Culvert and Culvert Toewall reinforcing not shown for clarity.)

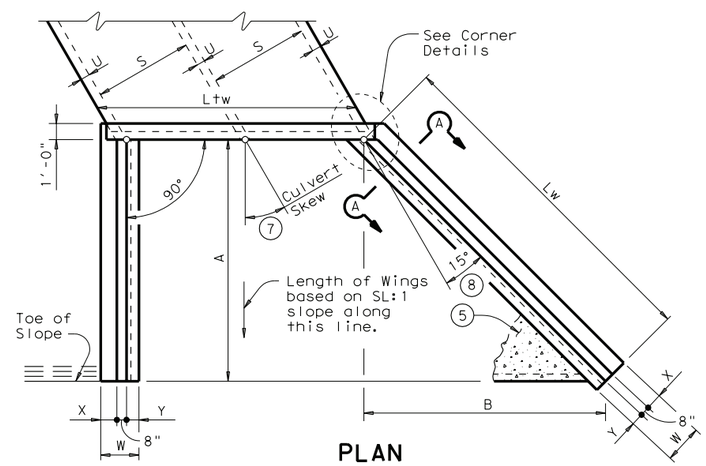

PLAN
(Showing dimensions and 30° Skew.)

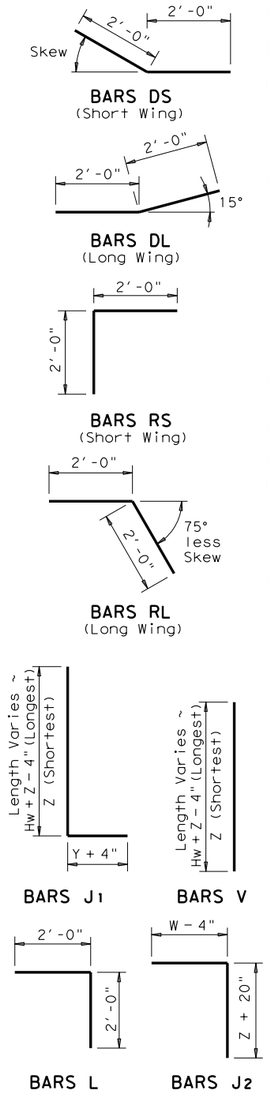

1. Extend Bars P 3'-0" minimum into bottom slab of Box Culvert.
2. Adjust to fit as necessary to maintain 1 ¼" clear cover and 4" minimum between bars.
3. Quantities shown are based on an average wing height for two wings (one structure end). To determine total quantities for two wings multiply the tabulated values by 0.5 x (A+Lw).
4. Recommended values of Slope are: 2:1, 3:1, 4:1, & 6:1.
5. When shown elsewhere on the plans, a 5" deep concrete riprap shall be constructed. Payment for riprap shall be as required by Item 432, "Riprap". Unless otherwise shown on the plans or directed by the Engineer, the riprap shall have a 6" wide by 1'-6" deep reinforced concrete toewall along all edges adjacent to natural ground; the toewall shall be reinforced by extending typical riprap reinforcing into the toewall; construction joints or grooved joints, oriented in the direction of flow, shall extend across the full distance of the riprap, at intervals of approximately 20'. When such riprap is provided, the culvert toewall shown in SECTION B-B will not be required.
6. At Contractor's option, Culvert Toewall may be ended flush with Wingwall Toewall. Adjust reinforcing from that shown as necessary.
7. Applicable values of of Skew are: 15°, 30°, and 45°.
8. Typical wingwall angle for all skews.
9. 0" min to 5'-0" max. Estimated curb heights are shown elsewhere in the plans. For structures with pedestrian rail, bicycle rail or curbs taller than 1'-0", refer to ECD standard. For structures with T6 bridge rail, refer to T6-CM standard. For structures with traffic rail, other than T6, refer to RAC standard.
10. For vehicle safety, curb heights and wall heights shall be reduced, if necessary, to provide a maximum 3" projection above finished grade. No changes will be made in quantities and no additional compensation will be allowed for this work.

GENERAL NOTES:

Designed according to AASHTO LRFD Specifications.
All reinforcing steel shall be Grade 60.
All concrete shall be Class "C" and shall have a minimum compressive strength of 3600 psi.
All reinforcing bars shall be adjusted to provide a minimum of 1 ¼" clear cover.
When structure is founded on solid rock, depth of toewalls for culverts and wingwalls may be reduced or eliminated as directed by the Engineer.
See BCS sheet for additional dimensions and information.
The quantities for concrete and reinforcing steel resulting from the formulas given on this sheet are for Contractor's information only.

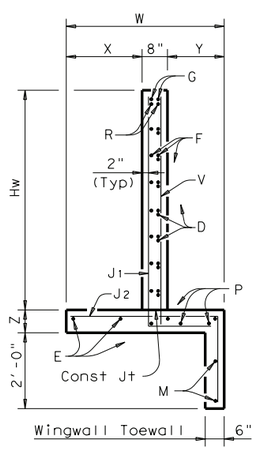

SECTION A-A

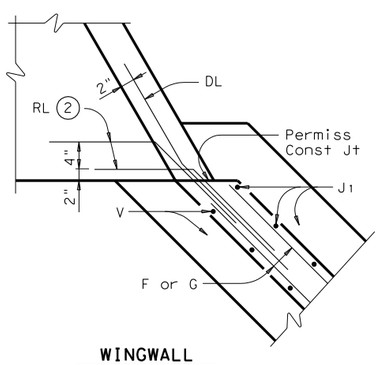

WINGWALL

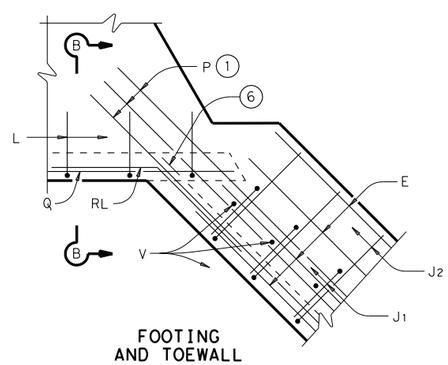

FOOTING AND TOEWALL

CORNER DETAILS
(Culvert and Culvert Toewall reinforcing not shown for clarity.)

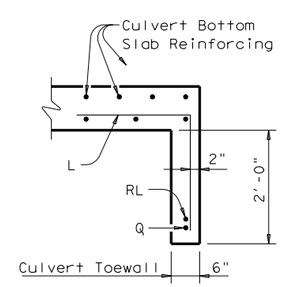

SECTION B-B (5)

DISCLAIMER:
The use of this standard is governed by the "Texas Engineering Practice Act". No warranty of any kind is made by TxDOT for any purpose whatsoever. TxDOT assumes no responsibility for the conversion of this standard to other formats or for incorrect results or damages resulting from its use.

COMMENTS:

LEVELS DISPLAYED

Texas Department of Transportation
Bridge Division

CONCRETE WINGWALLS WITH FLARED WINGS FOR SKEWED BOX CULVERTS

FW-S

FILE: fw-sstde.dgn	DN: GAF	CK: CAT	DW: TxDOT	CK: GAF
© TxDOT February 2010	DISTRICT	FEDERAL AID PROJECT		SHEET
REVISIONS				
	COUNTY	CONTROL	SECT	JOB	HIGHWAY