SANITARY SEWER CONSTRUCTION NOTES

1. ALIGNMENT, CENTERLINE CURVE DATA, AND STATIONING TO BE DETERMINED FROM APPROVED, RECORDED SUBDIVISION PLAT OR ROAD RIGHT-OF-WAY.

2. SEWER MAINS, MANHOLES AND LIFT STATIONS ARE TO BE DESIGNED, TO BE CONSTRUCTED AND TESTED IN ACCORDANCE WITH CITY OF TOMBALL STANDARDS AND TCEQ TITLE 30 CHAPTER 317 OF THE TEXAS ADMINISTRATIVE CODE. TAC' 317.2 REQUIRES LOW-PRESSURE AIR TESTS TO CONFORM TO THE PROCEDURE DESCRIBED IN ASTM C828, C924, F-1417 OR OTHER APPROPRIATE PROCEDURES. FOR SAFETY REASONS, AIR TESTING OF SECTIONS OF PIPE SHALL BE LIMITED TO LINES LESS THAN 36-INCH AVERAGE INSIDE DIAMETER. LINES 36-INCH IN DIAMETER OR LARGER MAY BE AIR TESTED AT EACH JOINT. DEFLECTION TESTING OF ALL FLEXIBLE AND SEMI-RIGID PIPE SHALL BE CONDUCTED AFTER THE FINAL BACKFILL HAS BEEN IN PLACE FOR AT LEASE 30 DAYS. NO PIPE SHALL EXCEED A DEFLECTION OF 5%. THE DEFLECTION TEST IS TO BE RUN USING A RIGID MANDREL, AND SHALL HAVE A DIAMETER EQUAL TO 95% OF THE INSIDE DIAMETER OF THE PIPE. TEST SHALL BE PERFORMED WITHOUT MECHANICAL PULLING DEVICES. ALL TESTS TO BE WITNESSED & APPROVED BY CITY OF TOMBALL.

3. MAINTAIN 12 INCH MINIMUM CLEARANCE AT CROSSINGS BETWEEN ALL OTHER UTILITY LINES, STORM SEWERS, AND CULVERTS UNLESS OTHERWISE NOTED.

4. SEWER TRENCHES UNDER OR WITHIN ONE (1) FOOT OF PROPOSED OR FUTURE PAVEMENT TO BE BACKFILLED WITH CEMENT SAND (1.5 SACKS PER TON) BACKFILL AS SPECIFIED, TO WITHIN ONE (1) FOOT OF SUBGRADE, BEDDING WILL BE CLASS AAA WHERE CEMENT-SAND BACKFILL IS USED FOR SANITARY SEWERS. INCLUDE COST OF BACKFILL IN UNIT PRICE BID PER LINEAR FOOT OF PIPE.

5. ALL PROPOSED GRAVITY SANITARY SEWER LINES WILL BE DUCTILE IRON, OR SDR 26 PVC PIPE & 8" MIN I.D. UNLESS APPROVED OTHERWISE.

6. BEDDING FOR ALL TYPES OF SANITARY SEWER PIPE SHALL BE CEMENT STABILIZED SAND (1.5 SACKS PER TON) CLASS AA AT ALL DEPTHS. ALL SEWER LINES TO BE INSPECTED BY CITY OF TOMBALL PRIOR TO BACKFILL.

7. FOR PVC PIPE, USE MANHOLE WATERSTOP GASKET AND CLAMP ASSEMBLY AT MANHOLE CONNECTIONS (NO SEPARATE PAY).

8. SANITARY SEWER MANHOLES SHALL BE PRECAST OR POURED IN PLACE MONOLITHIC CONCRETE, AND BACKFILLED WITH CEMENT-SAND AS SPECIFIED (NO SEPARATE PAY). MANHOLES WILL BE VACUUM TESTED AS SPECIFIED BY THE CITY OF TOMBALL.

9. ALL FAR-SIDE LEADS SHALL BE FOUR (4) INCHES OR SIX (6) INCHES AT 1.0% MIN. SLOPE. SIX (6) INCH ABS WILL NOT BE ACCEPTABLE. ALL FAR SIDE LEADS (OPEN-CUT OR BORED AND JACKED) SHALL BE DUCTILE IRON, 150 PSI THICKNESS CLASS 50, OR PVC, DR-18.

10. ALL PRECAST CONCRETE AND POURED-IN-PLACE CONCRETE MANHOLES SHALL HAVE THE TOP 18 INCHES CONSTRUCTED OF PRECAST RINGS & TO EXTEND 3"-6" ABOVE NATURAL GRADE.

11. STUBS OR LEADS SERVING TWO LOTS SHALL HAVE A SERVICE WYE AND CLEANOUT WITH PLUGS (NO SEPARATE PAY). THE WYE SHALL BE LOCATED WITHIN THE STREET RIGHT-OF-WAY OR AN ADJOINING UTILITY EASEMENT.

12. STACKS SERVING NEAR-SIDE AND FAR-SIDE LOTS SHALL HAVE A SERVICE WYE AND CLEANOUTS WITH PLUGS FOR THE NEAR-SIDE LOT (NO SEPARATE PAY).

13. ALL DUCTILE IRON PIPE & FITTINGS SHALL BE 150 PSI THICKNESS CLASS 50 WITH EIGHT (8) MIL BLACK VIRGIN POLYETHYLENE WRAP AS SPECIFIED. ALL PVC PIPE SHALL HAVE RUBBER GASKET JOINTS.

14. MANHOLE RIMS ARE TO BE SET AT THE ELEVATIONS SHOWN ON THE PLANS INITIALLY, AFTER PAVING AND GRADING IS COMPLETED, RIMS ARE TO BE ADJUSTED TO THREE (3) TO SIX (6) INCHES ABOVE FINAL GRADE AND BLACK DRESS DIRT TO PROVIDE DRAINAGE AWAY FROM MANHOLE.

15. ALL PVC PIPE SHALL HAVE RUBBER GASKET EQUIPPED BELL AND SPIGOT JOINTS. SOLVENT WELDED JOINTS WILL NOT BE APPROVED FOR THIS PROJECT.

16. ALL GRADE CHANGES AT MANHOLES IN EXCESS OF 2 FEET SHALL BE ACCOMPLISHED WITH DROP MANHOLE CONNECTIONS.

17. CONTRACTOR TO FURNISH CITY WITH RECORD DRAWINGS UPON COMPLETION OF PROJECT (CERTIFIED BY ENGINEER).

SPECIAL NOTES: LOCATION OF SANITARY SEWER FACILITIES

THE UTILITY CONTRACTOR IS RESPONSIBLE FOR LOCATING AND MARKING -ALL STACKS AND FAR-SIDE LEADS AFTER THE PAVING IN THIS SECTION IS COMPLETE.

A ¼ -INCH DEEP NOTCH SHALL BE CUT IN THE CURB AND PAINTED WITH A RED LINE ADJACENT TO THE STACK OR LEAD.

IF STAKES ARE LEFT IN THE GROUND AT THE STACKS AND LEADS AFTER CONSTRUCTION OF UTILITIES, THEN AN EFFORT WILL BE MADE TO PRESERVE THEM DURING PAVING CONSTRUCTION. HOWEVER, IF THESE STAKES ARE KNOCKED OUT FOR ANY REASON, THE UTILITY CONTRACTOR REMAINS RESPONSIBLE FOR LOCATING AND MARKING THE FACILITIES AS DESCRIBED ABOVE.

NOT TO SCALE

CITY OF TOMBALL
ENGINEERING & PLANNING DEPARTMENT

SANITARY SEWER CONSTRUCTION NOTES

APPROVED BY COT:

ENGINEERING & PLANNING DEPARTMENT
EFFECTIVE JULY 1, 2010

SHEET 001 OF 001 | DWG NO: COT WW-01

CAD FILE PATH:

CAD FILE PATH:

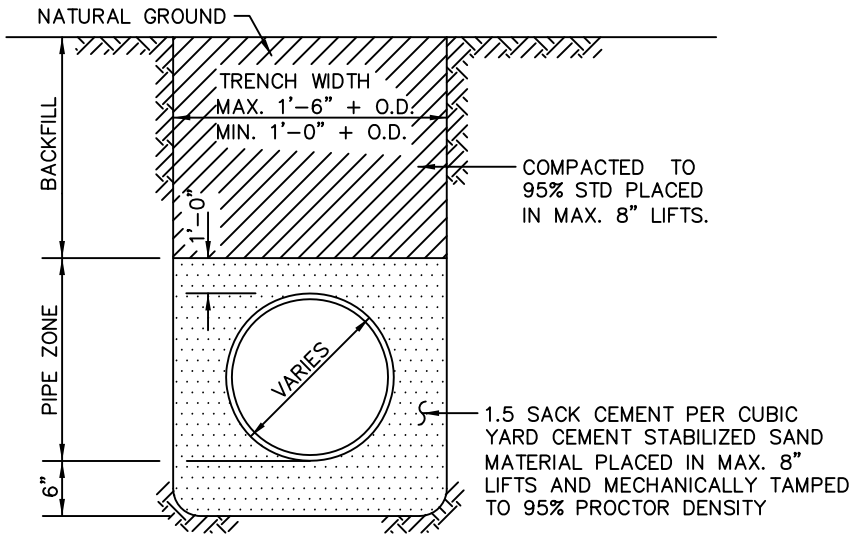

USE FOR SEWERS IN EASEMENTS & SIDE LOTS NOT UNDER EXISTING OR FUTURE ROADS, STREETS, OR DRIVEWAYS.

CLASS "A"

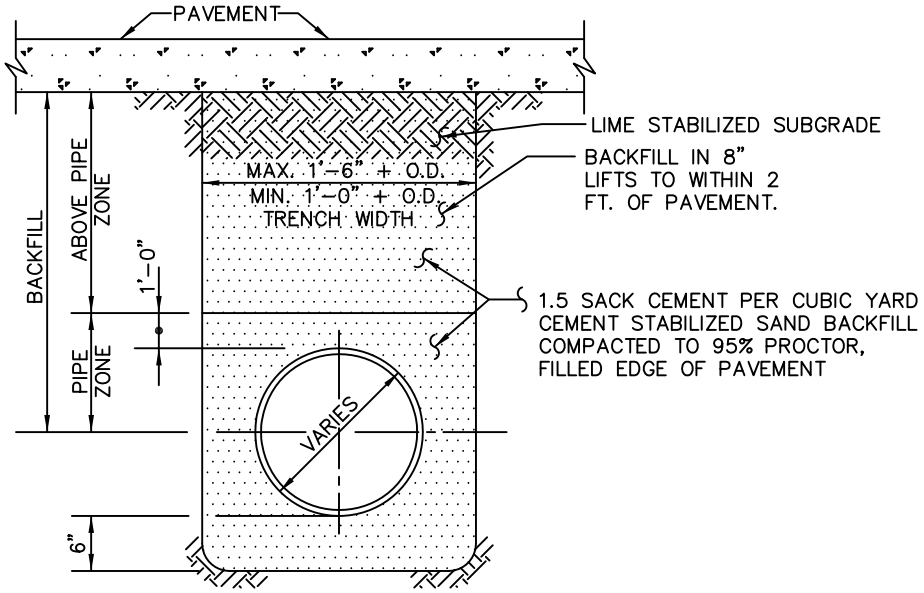

USE FOR SEWERS UNDER EXISTING OR FUTURE ROADS STREETS OR DRIVEWAYS.

CLASS "A"-"A"

SANITARY SEWER BEDDING AND BACKFILL

NOT TO SCALE

REFER TO:

1. GENERAL NOTES
2. C.S.S. NOTES

CITY OF TOMBALL
ENGINEERING & PLANNING DEPARTMENT

SANITARY SEWER BEDDING & BACKFILL CLASS 'A' & CLASS 'A-A' DETAILS

APPROVED BY COT:

ENGINEERING & PLANNING DEPARTMENT
EFFECTIVE JULY 1, 2010

SHEET 001 OF 001 | DWG NO: COT WW-02

CAD FILE PATH:

NOTES:

1. SANITARY SEWER MUST BE BELOW WATER LINE WHEREVER POSSIBLE. WHEN WATERLINE IS BELOW THE SANITARY SEWER PROVIDE MINIMUM 2 FT SEPARATION AND INSTALL PIPE SAME FOR SEWER BELOW THE WATER.
2. WHEN PRESSURE-RATED PIPE IS REQUIRED, PROVIDE PIPE WITH MINIMUM 150 PSI PRESSURE RATING.
3. ADAPTERS MUST BE FACTORY MOLDED OR FABRICATED, WITH RING STIFFNES AT LEAST EQUAL TO THE ADJOINING SANITARY SEWER PIPE, AND USING RESILIENT GASKET OR SEAL MATERIAL. FLEXIBLE RUBBER "BOOT" TYPE ADAPTERS WILL NOT BE ACCEPTED.
4. INSTALL FORCE MAINS SAME AS FOR GRAVITY SEWER, USING SPECIFIED PRESSURE PIPE.
5. "Y" MUST ALWAYS BE GREATER THAN OR EQUAL TO 6".
6. "X" MUST BE GREATER THAN OR EQUAL TO 4'.
7. ALTERNATIVES MAY BE SHOWN ON THE DRAWINGS OR DESCRIBED IN THE SPECIFICATIONS.
8. SEPARATION REQUIREMENTS SHOWN HERE DO NOT APPLY TO SERVICE CONNECTIONS – REFER TO PLUMBING CODE FOR APPLICABLE REQUIREMENTS.

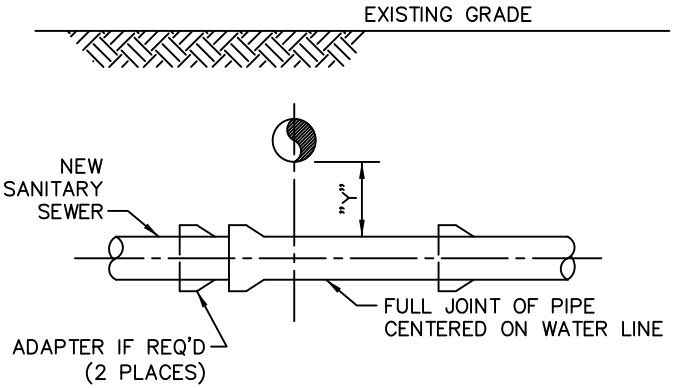

NEW SANITARY SEWER CROSSING EXISTING WATER LINE

INSTALLATION REQUIREMENTS
1. IF "Y" IS GREATER THAN 6" AND "Y" IS LESS THAN 2', USE MINIMUM 18 FT JOINT OF PRESSURE-RATED PIPE. 2. IF "Y" IS GREATER THAN 2' AND "Y" IS LESS THAN 9', USE GRAVITY SEWER PIPE IN CEMENT-STABALIZED SAND EMBEDMENT. 3. IF "Y IS GREATER THAN 9', USE STANDARD EMBEDMENT AND NORMAL JOINT SPACING.

SEWER LINE CROSSING BELOW WATER LINE WITHIN 2 FT SEPARATION		
GRAVITY SANITARY SEWER PIPE SIZE	PRESSURE-RATED PIPE SIZE & TYPE (NOTE 2)	ADAPTER REQUIRED
6" TO 12" (ASTM D3034)	SAME SIZE ASTM D2241, SDR 26	ASTM D3034 TO D2665 (SEWER TO D.W.V.) ADAPTER COUPLING
15" (ASTM D3034)	14" LINED DUCTILE IRON OR AWWA C905, DR25	NONE REQUIRED
18" AND 24"	SAME SIZE AWWA C905, PRESSURE-RATED FRP, OR LINED DUCTILE IRON, MANHOLE TO MANHOLE	NONE REQUIRED
21" AND 27"	PRESSURE PIPE NOT AVAILABLE. SEE CASING ALTERNATIVE	NOT APPLICABLE
30" AND LARGER	SAME SIZE PRESSURE-RATED FRP OR LINED DUCTILE IRON, MANHOLE TO MANHOLE	NOT APPLICABLE
CASING ALTERNATIVE: ANY SIZE AND TYPE	INSTALL AS CASING PIPE MIN 18 FT JOINT OF PRESSURE PIPE AT LEAST 2 NOMINAL SIZES LARGER THAN SAN. SEWER CARRIER PIPE. GROUT ANNULAR SPACE WITH TUNNEL GROUT	NOT APPLICABLE

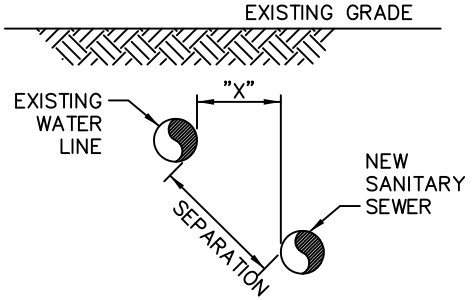

NEW SANITARY SEWER PARALLEL TO EXISTING WATER LINE

INSTALLATION REQUIREMENTS
1. IF "X" IS LESS THAN 9' AND SEPARATION IS LESS THAN 9', USE PRESSURE-RATED PIPE MH TO MH. "X" MUST BE AT LEAST 4 FT. 2. IF "X" IS GREATER THAN OR EQUAL TO 4' AND SEPARATION IS 9' OR GREATER, USE STANDARD PIPE AND EMBEDMENT.

NOT TO SCALE

CITY OF TOMBALL
ENGINEERING & PLANNING DEPARTMENT

SANITARY SEWERS CROSSING OR PARALLEL TO WATER LINES

APPROVED BY COT:

ENGINEERING & PLANNING DEPARTMENT
EFFECTIVE JULY 1 2010

SHEET 001 OF 001 | DWG NO: COT WW-03

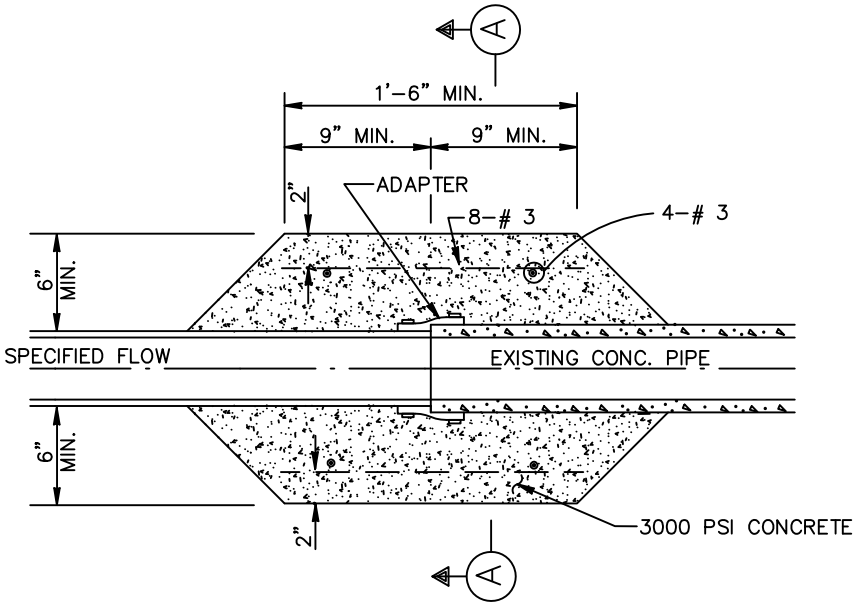

LONG SECTION

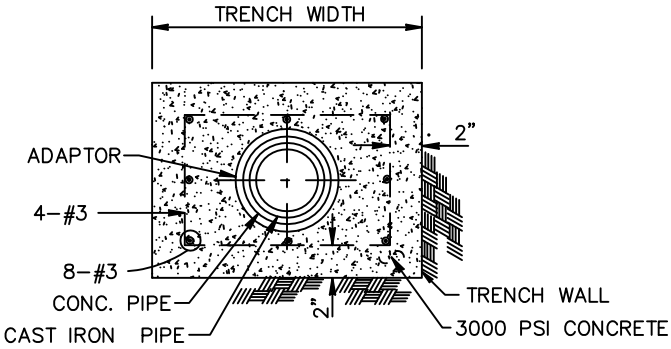

CROSS-SECTION A-A

NOTE:

REINFORCING BARS TO BE USED ONLY ON WET SAND CONSTRUCTION.

NOT TO SCALE

CITY OF TOMBALL
ENGINEERING & PLANNING DEPARTMENT

CONCRETE PIPE TO FLEXIBLE PIPE CONNECTION CONSTRUCTION DETAILS

APPROVED BY COT:

ENGINEERING & PLANNING DEPARTMENT
EFFECTIVE JULY 1, 2010

SHEET 001 OF 001 | DWG NO: COT WW-04

CAD FILE PATH:

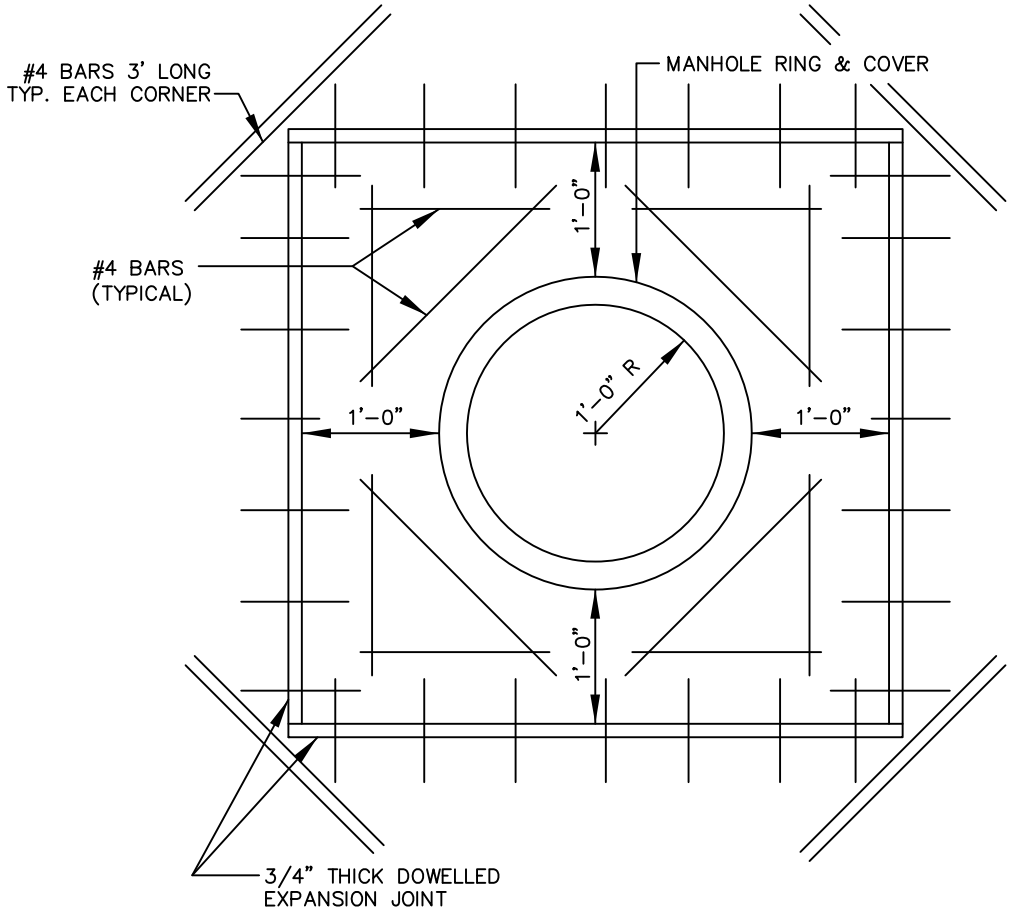

MANHOLE BLOCKOUT
(SANITARY) IN PAVEMENT

NOT TO SCALE

CITY OF TOMBALL
ENGINEERING & PLANNING DEPARTMENT

MANHOLE BLOCKOUT
FOR SANITARY
IN PAVEMENT DETAIL

APPROVED BY COT:

ENGINEERING & PLANNING DEPARTMENT
EFFECTIVE JULY 1, 2010

SHEET 001 OF 001 | DWG NO: COT WW-05

CAD FILE PATH:

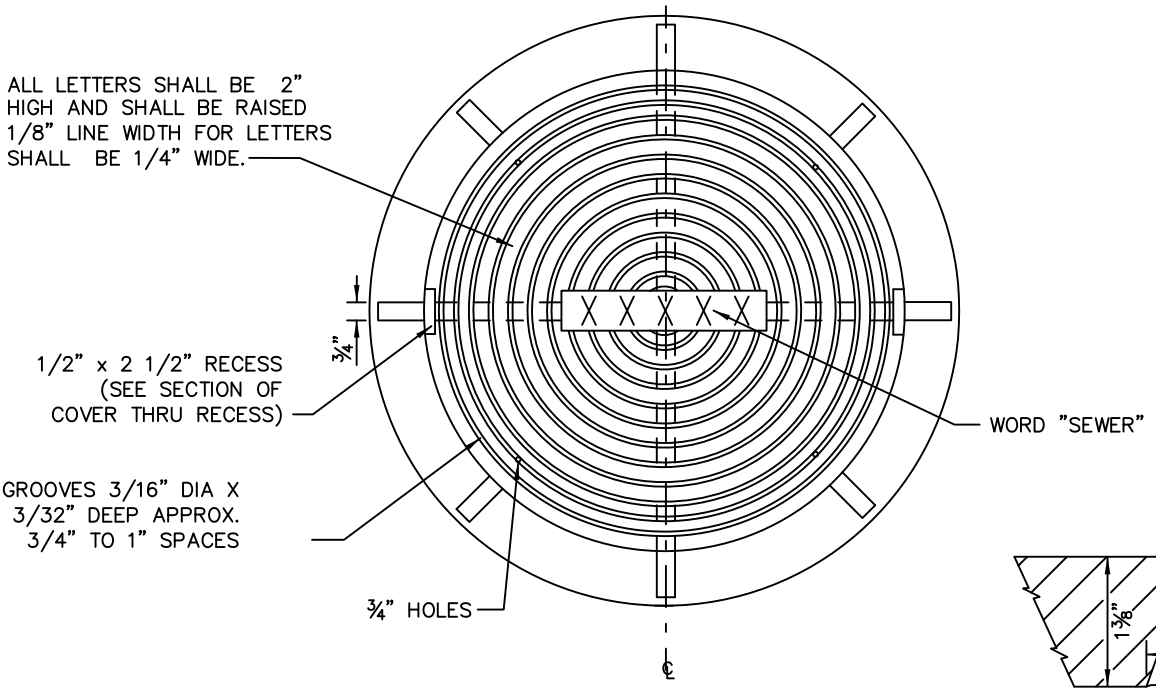

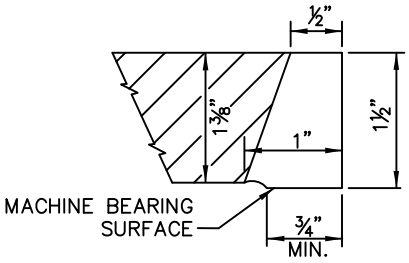

SECTION OF COVER THRU RECESS

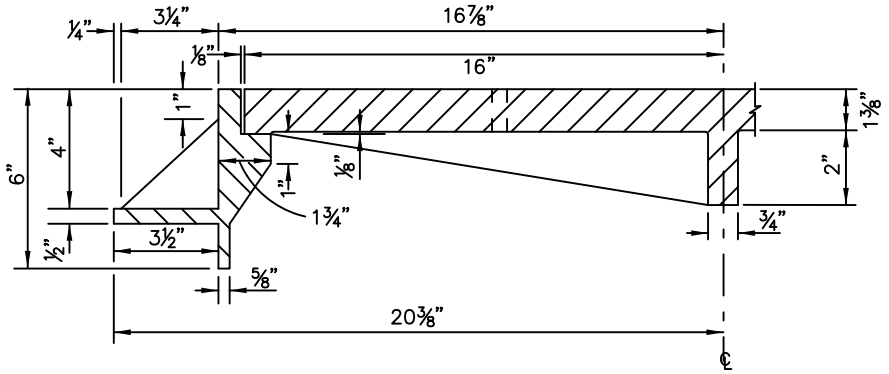

HALF SECTION
32" MANHOLE COVER WITH FRAME

32" MANHOLE FRAME & COVER FRAME:
VULCAN MODEL V-1420 OR EQUAL COVER:
VULVAN MODEL V-1419

NOT TO SCALE

CITY OF TOMBALL
ENGINEERING & PLANNING DEPARTMENT

SANITARY MANHOLE FRAME & COVER CONSTRUCTION DETAILS

APPROVED BY COT:

ENGINEERING & PLANNING DEPARTMENT
EFFECTIVE JULY 1, 2010

SHEET 001 OF 001 | DWG NO: COT WW-06

CAD FILE PATH:

NOTES:

1. A MINIMUM OF 4" ADJUSTMENT RING SHALL BE PROVIDED. THE TOTAL HEIGHT OF THE ADJUSTMENT RINGS SHALL NOT EXCEED 12".
2. MANHOLE INTERSECTING PIPES SHALL BE INSTALLED ONLY WHEN CALLED FOR IN PLAN AND PROFILE DRAWING.
3. SEAT MANHOLE FRAME IN SEALANT.
4. OMIT CEMENT MORTAR WHEN MANHOLE IS LOCATED IN PAVED AREAS.
5. MINIMUM REINFORCING IN THE BASE BE # 5 @ 8" O.C.E.W.
6. PROVIDE BACKFILL MATERIAL AS PER COT STANDARD SPECIFICATION.

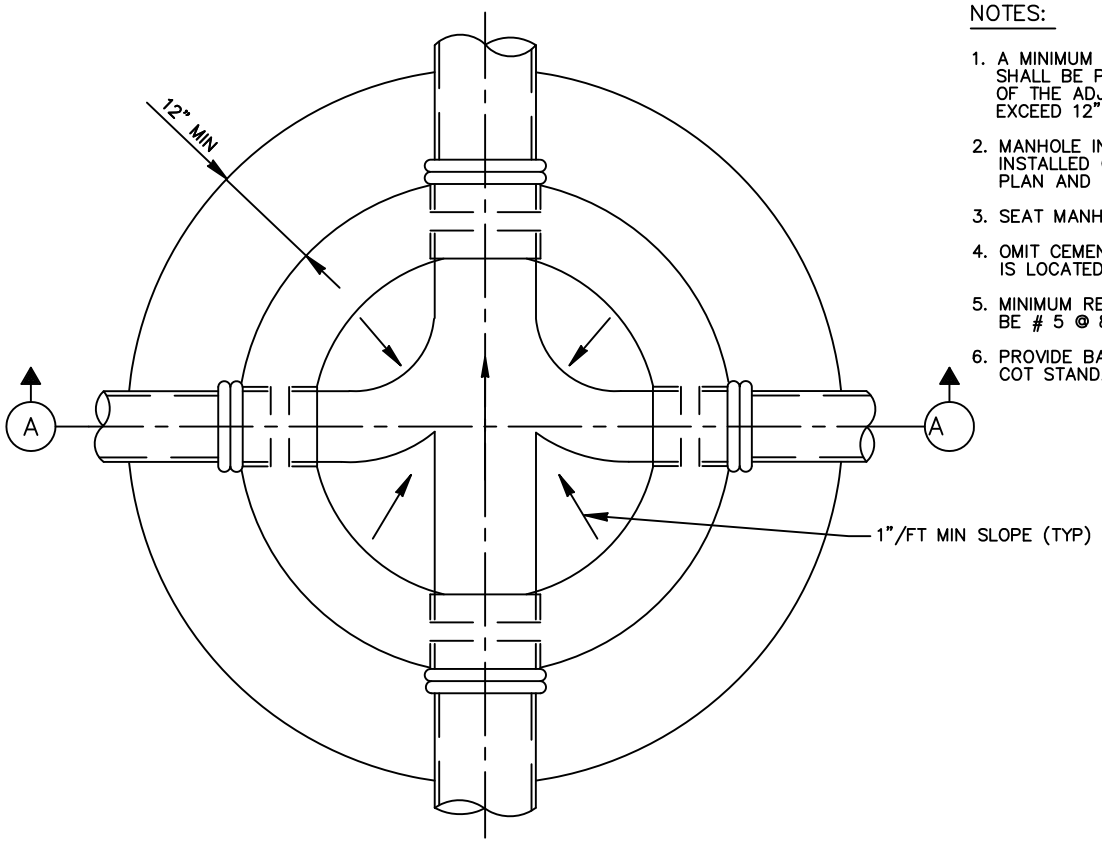

FOUNDATION PLAN

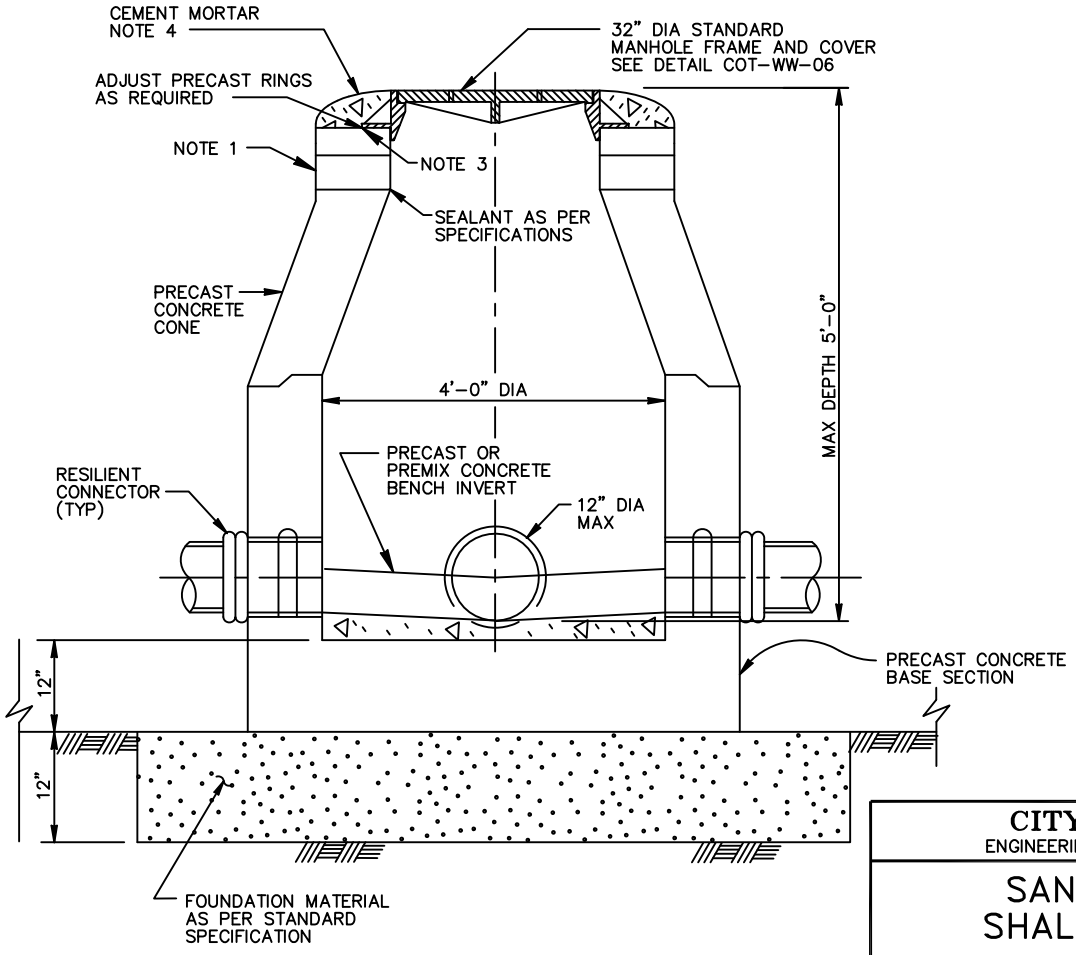

SECTION A

NOT TO SCALE

CITY OF TOMBALL
ENGINEERING & PLANNING DEPARTMENT

SANITARY SEWER SHALLOW MANHOLE

APPROVED BY COT:

ENGINEERING & PLANNING DEPARTMENT
EFFECTIVE JULY 1, 2010

SHEET 001 OF 001 | DWG NO: COT WW-07

CAD FILE PATH:

NOTES:

1. DEPTH OF MANHOLE DETERMINES SECTIONS REQUIRED.
2. PRECAST CONCRETE RINGS SHALL BE PROVIDED FOR A COMBINED ADJUSTMENT HEIGHT OF AT LEAST 12". THE TOTAL HEIGHT OF THE ADJUSTMENT RINGS SHALL NOT EXCEED 1'-6".
3. MANHOLE WALL THICKNESS FOR DEPTH EXCEEDING 12'-0" SHALL BE DETERMINED TO MEET LOADING CONDITIONS. MIN THICKNESS 5".
4. MANHOLE DROP AND INTERSECTING PIPES SHALL BE INSTALLED ONLY WHEN CALLED FOR IN PLAN AND PROFILE DRAWING.
5. SEAT MANHOLE FRAME IN SEALANT PER COT STANDARD SPECIFICATION.
6. ECCENTRIC PRECAST CONCRETE MANHOLE MAY BE USED.
7. OMIT CEMENT MORTAR WHEN MANHOLE IS LOCATED IN PAVED AREAS.
8. MIN REINFORCING IN THE PRECAST CONCRETE BASE SHALL BE # 5 @ 8" O.C.E.W.
9. PROVIDE BACKFILL TO MATCH ADJACENT PIPE TRENCH BACKFILL PER STANDARD SPECIFICATIONS.

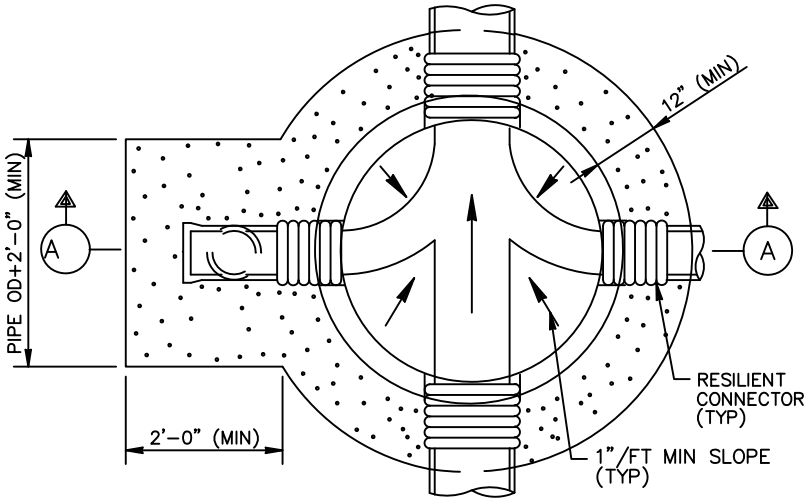

FOUNDATION PLAN

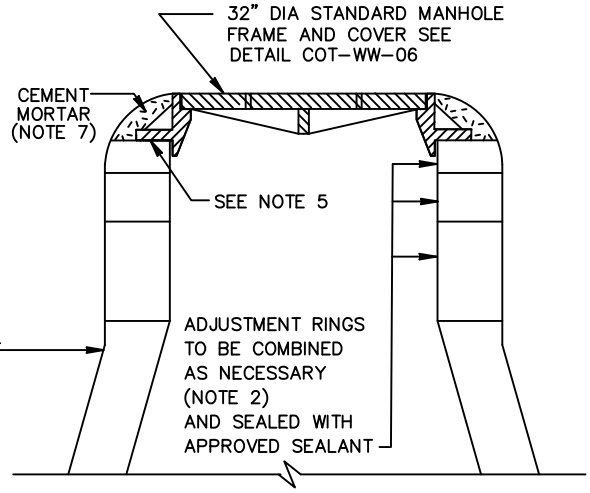

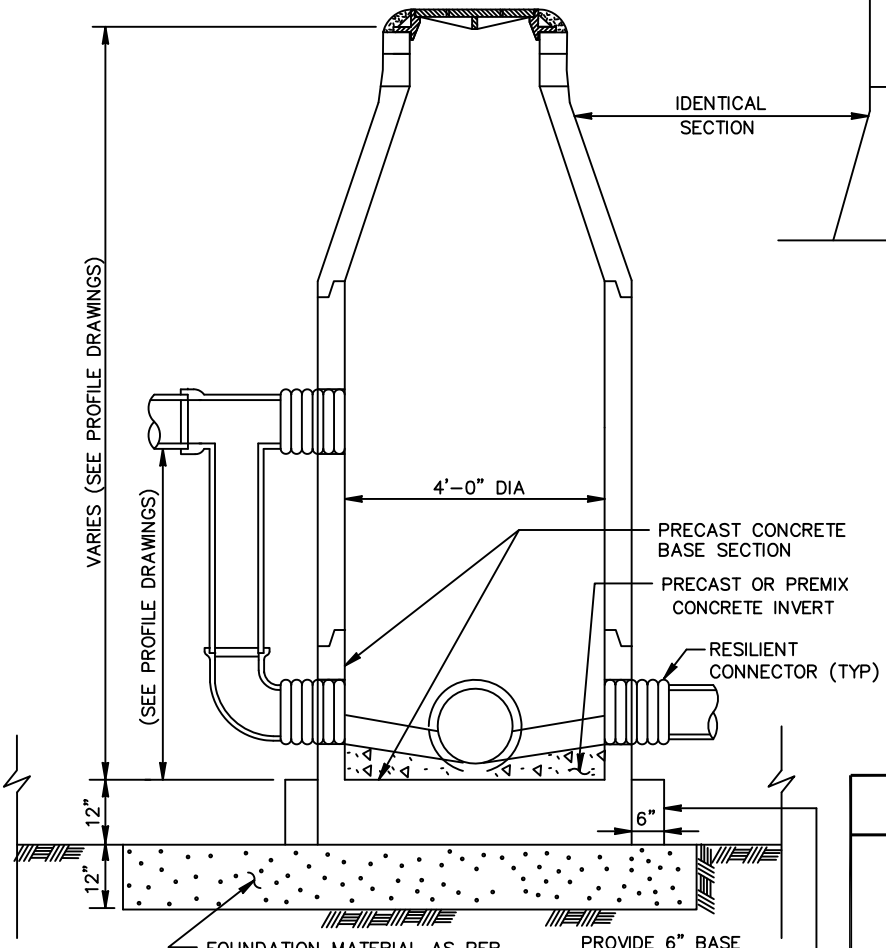

SECTION A

NOT TO SCALE

CITY OF TOMBALL
ENGINEERING & PLANNING DEPARTMENT

4-FT DIAMETER PRECAST CONCRETE MANHOLE

APPROVED BY COT:

ENGINEERING & PLANNING DEPARTMENT
EFFECTIVE JULY 1, 2010

SHEET 001 OF 001 | DWG NO: COT WW-08

CAD FILE PATH:

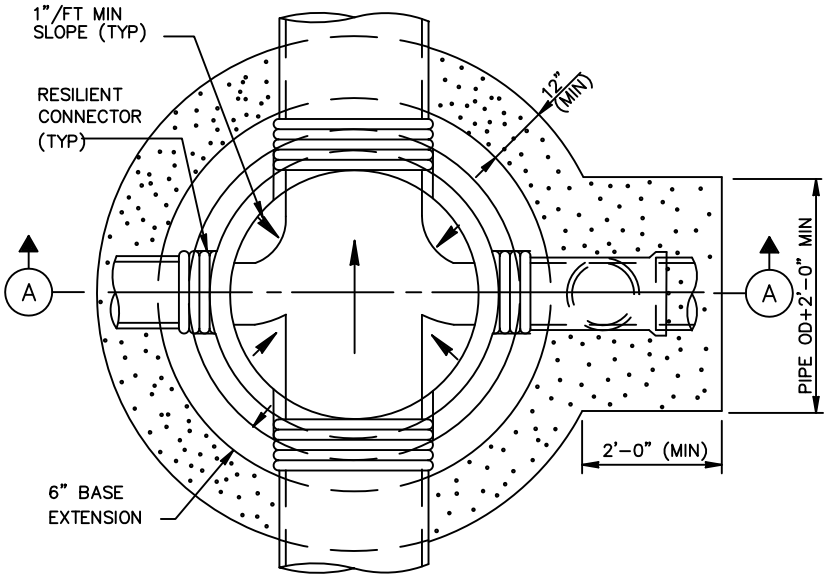

FOUNDATION PLAN

NOTES:

1. DEPTH OF MANHOLE DETERMINES SECTIONS REQUIRED.
2. PRECAST CONCRETE RINGS SHALL BE PROVIDED FOR A COMBINED ADJUSTMENT HEIGHT OF AT LEAST 12". THE TOTAL HEIGHT OF THE ADJUSTMENT RINGS SHALL NOT EXCEED 1'-6".
3. MANHOLE WALL THICKNESS FOR DEPTH EXCEEDING 12'-0" SHALL BE DETERMINED TO MEET LOADING CONDITIONS. MIN THICKNESS 5".
4. MANHOLE DROP AND INTERSECTING PIPES SHALL BE INSTALLED ONLY WHEN CALLED FOR IN PLAN AND PROFILE DRAWING.
5. ALTERNATE ECCENTRIC CONE AND/OR TRANSITION SECTION MAY BE USED.
6. SEAT MANHOLE FRAME IN SEALANT PER COT STANDARD SPECIFICATION.
7. OMIT CEMENT MORTAR WHEN MANHOLE IS LOCATED IN PAVED AREAS.
8. MIN REINFORCING IN THE PRECAST CONCRETE BASE SHALL BE # 5 @ 8" O.C.E.W.
9. WHERE DIMENSIONAL RESTRICTIONS DICTATE, THE MANHOLE BASE HEIGHT SHALL BE ADJUSTED TO HAVE THE UPPER INLET PIPE OF THE DROP ENTER INTO THE 4'-0" DIAMETER RISER SECTION.
10. PROVIDE BACKFILL TO MATCH ADJACENT PIPE TRENCH BACKFILL PER STANDARD SPECIFICATIONS.

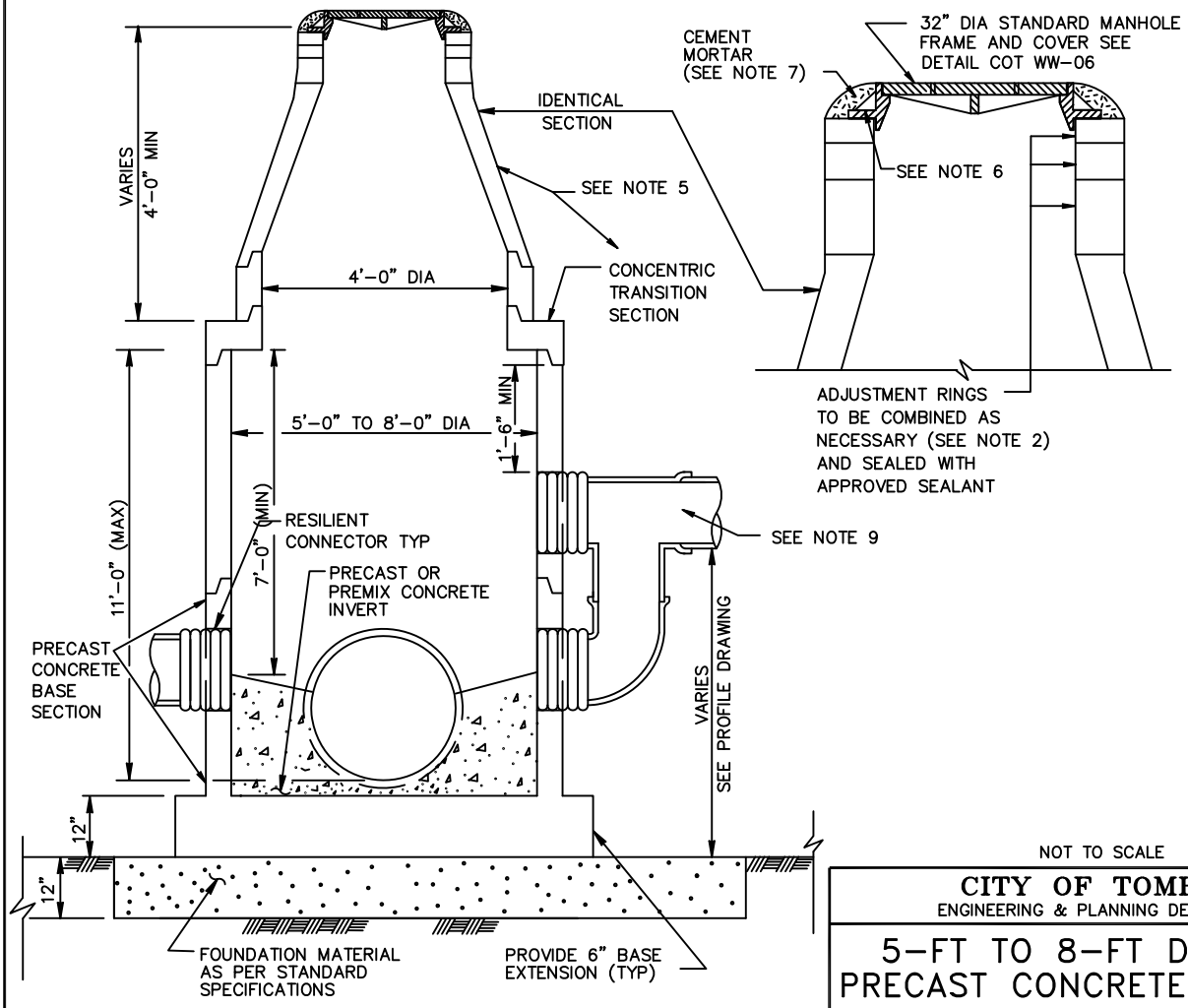

SECTION A

NOT TO SCALE

CITY OF TOMBALL
ENGINEERING & PLANNING DEPARTMENT

5-FT TO 8-FT DIAMETER PRECAST CONCRETE MANHOLE

APPROVED BY COT:

ENGINEERING & PLANNING DEPARTMENT
EFFECTIVE JULY 1, 2010

SHEET 001 OF 001 | DWG NO: COT WW-09

CAD FILE PATH:

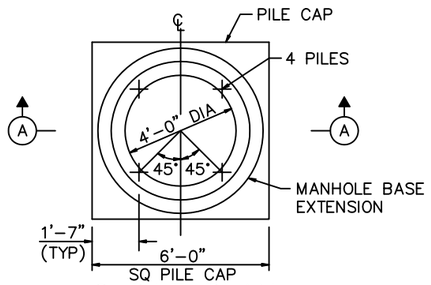

6 PILE PLAN
4'-0" ID MANHOLE

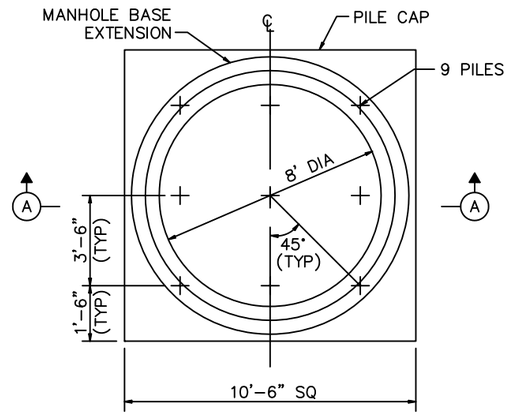

9 PILE PLAN
8'-0" ID MANHOLE

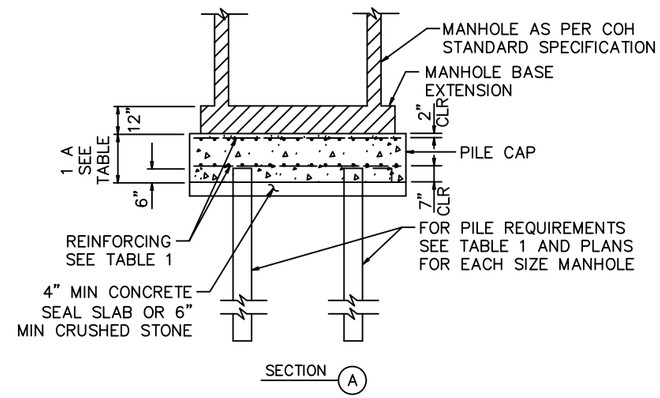

NOTES:

1. PILING SUPPORT SHALL BE INSTALLED AT ALL LOCATIONS WHERE HEAVING SUBGRADE CONDITIONS ARE LIKELY TO OCCUR, AS DETERMINED BY THE CITY ENGINEER.
2. THE CITY ENGINEER WILL PROVIDE THE SIZE, LENGTH, AND MATERIAL OF PILE NEEDED TO CARRY THE CAPACITY SHOWN ON TABLE 1 BASED ON ACTUAL CONDITIONS REVEALED AT TIME OF CONSTRUCTION.

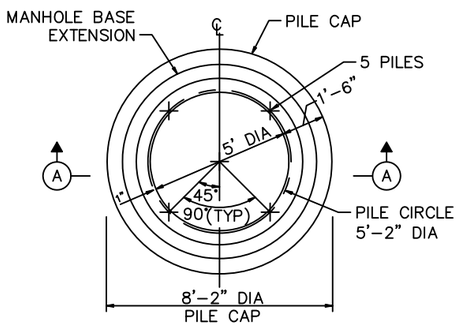

PLAN 5'-0"
ID MANHOLE

TABLE 1

PILE REQUIREMENTS

MANHOLE ID (FT)	NUMBER OF PILES	DEPTH TO INVERT (FT)	CAPACITY/ PILE (TONS) MINIMUM	PILE CAP DIMEN A (FT)	PILE CAP REINF (EW, TOP)
4	4	10	12	1'-9"	#6 @ 6"
		12	10		
		15	11		
		20	13		
		25	15		
		30	17		
5	5	10	10	1'-9"	#6 @ 6"
		12	11		
		15	12		
		20	15		
		25	17		
		30	20		
6	6	10	9	2'-0"	#6 @ 6"
		12	10		
		15	12		
		20	15		
		25	17		
		30	20		
8	9	10	8	2'-0"	#7 @ 6"
		12	9		
		15	10		
		20	13		
		25	16		
		30	18		

NOTES TO SPECIFIER:

1. INCLUDE THIS DETAIL ONLY IF THE GEOTECHNICAL REPORT INDICATES THAT AN UNSTABLE FOUNDATION (ONE WHICH WILL NOT ALLOW COMPACTION AND/OR DEWATERING AS SPECIFIED) IS POSSIBLE. IF THIS CONDITION IS REPORTED BY THE GEOTECHNICAL ENGINEER, NOTIFY THE CITY'S PROJECT MANAGER.
2. ALWAYS INCLUDE COMPANION STANDARD DETAIL SHOWING CRUSHED STONE SUPPORTED MANHOLE FOR UNSTABLE SUBGRADE WITH THIS DETAIL.
3. WHERE SOIL BORINGS ARE MADE AT MANHOLE LOCATIONS AND THE GEOTECHNICAL ENGINEER BELIEVES THAT THE CONDITIONS REQUIRING THIS DETAIL ARE LIKELY TO EXIST, PROVIDE PILE DESIGN INFORMATION DETERMINED BY THE GEOTECHNICAL ENGINEER FOR EACH SUCH MANHOLE. ADJUST NOTE#2 TO INDICATE THAT THE PILE INFORMATION PROVIDED MAY NEED TO BE ADJUSTED OR THE PILES ELIMINATED AND THAT OTHER MANHOLE LOCATIONS NOT SHOWN AS PILE SUPPORTED MAY NEED PILES DEPENDING ON ACTUAL CONDITIONS UNCOVERED.
4. PROVIDE APPROPRIATE PILE SPECIFICATIONS.

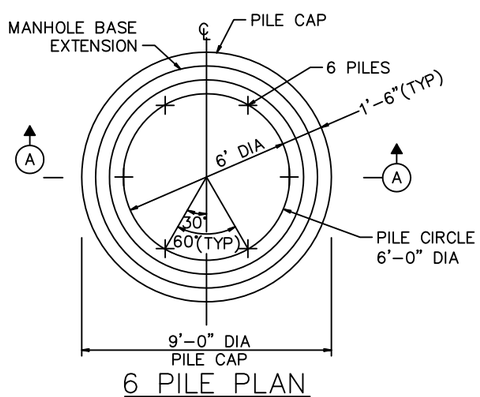

6 PILE PLAN
6'-0" ID MANHOLE

NOT TO SCALE

CITY OF TOMBALL
ENGINEERING & PLANNING DEPARTMENT

PILE SUPPORTED MANHOLE FOR UNSTABLE SUBGRADE

APPROVED BY COT:

ENGINEERING & PLANNING DEPARTMENT
EFFECTIVE JULY 1, 2010

SHEET 001 OF 001 | DWG NO: COT WW-10

NOTES:

1. CRUSHED STONE SUPPORT UNDER A MANHOLE BASE SHALL BE INSTALLED AT LOCATIONS WHERE REQUIRED SUBGRADE COMPACTION OR DEWATERING CANNOT BE ACHIEVED.
2. WHERE HEAVING SUBGRADE CONDITIONS OCCUR, AS DETERMINED BY THE CITY ENGINEER, A PILE SUPPORTED MANHOLE SHALL BE PROVIDED.

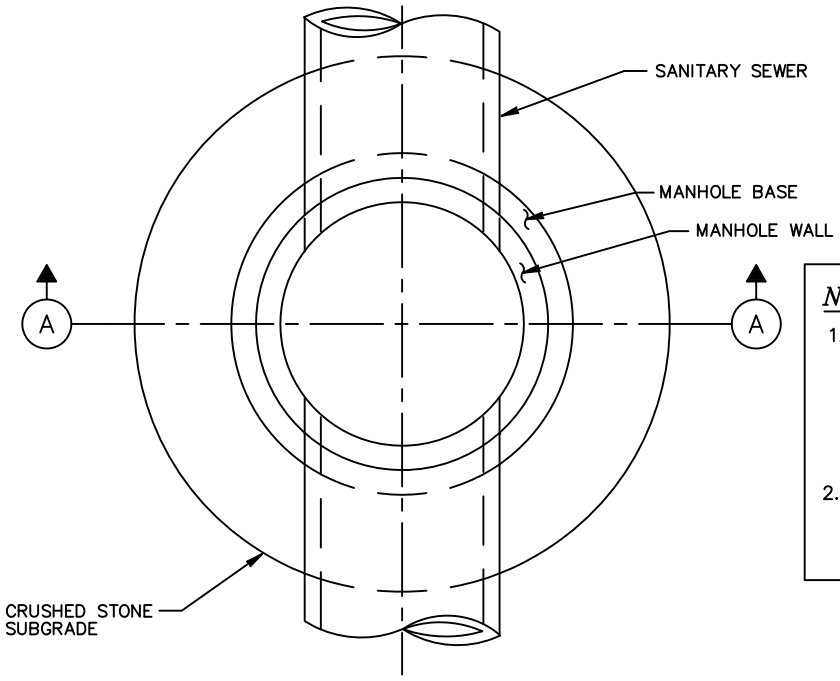

PLAN

NOTE TO SPECIFIER:

1. INCLUDE THIS DETAIL ONLY IF THE GEOTECHNICAL REPORT INDICATES THAT AN UNSTABLE FOUNDATION (ONE WHICH WILL NOT ALLOW COMPACTION OR DEWATERING AS SPECIFIED) IS POSSIBLE. IF THIS CONDITION IS REPORTED BY THE GEOTECHNICAL ENGINEER, NOTIFY THE CITY ENGINEER.
2. ALWAYS INCLUDE COMPANION STANDARD DETAIL FOR PILE SUPPORTED MANHOLE FOR UNSTABLE SUBGRADE WITH THIS DETAIL, IF GEOTECHNICAL REPORT INDICATES HEAVING SUBGRADE IS LIKELY.

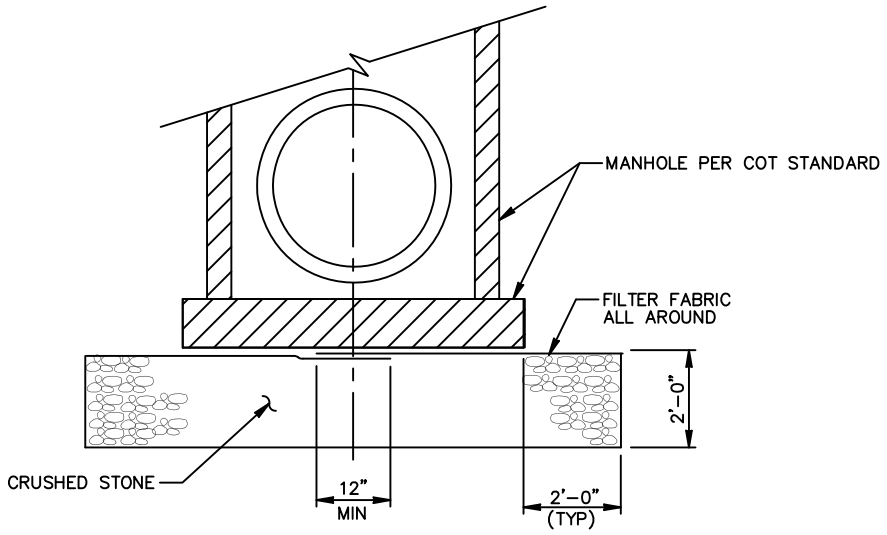

SECTION A

NOT TO SCALE

CITY OF TOMBALL
ENGINEERING & PLANNING DEPARTMENT

CRUSHED STONE SUPPORTED MANHOLE FOR WET STABLE TRENCH

APPROVED BY COT:

ENGINEERING & PLANNING DEPARTMENT
EFFECTIVE JULY 1, 2010

SHEET 001 OF 001 | DWG NO: COT WW-11

CAD FILE PATH:

CAD FILE PATH:

NOTES:

1. INSTALL AT LOCATION BASED ON 100-YEAR FLOOD ELEVATION SHOWN ON PLAN AND PROFILE DWGS.
2. DRAIN TO VENTED (ADJACENT) MH AT MIN 1% SLOPE. CONNECT TO MANHOLE WITH SPECIFIED CONNECTOR.
3. WHEN VENT CROSSES DRAINAGE DITCH, PROVIDE CEMENT STABILIZED SAND BEDDING.
4. THE VENT IS TO BE INSTALLED WITHIN THE RIGHT OF WAY.
5. SEE STANDARD SPECIFICATION FOR PROTECTIVE COATING REQUIREMENTS FOR EXPOSED FRP PIPE.

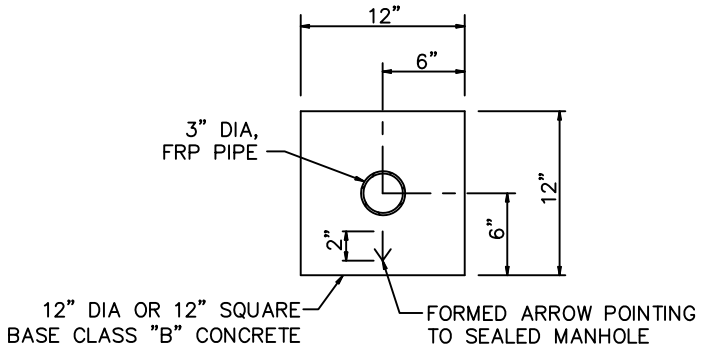

SECTION (A)
CONCRETE FOUNDATION

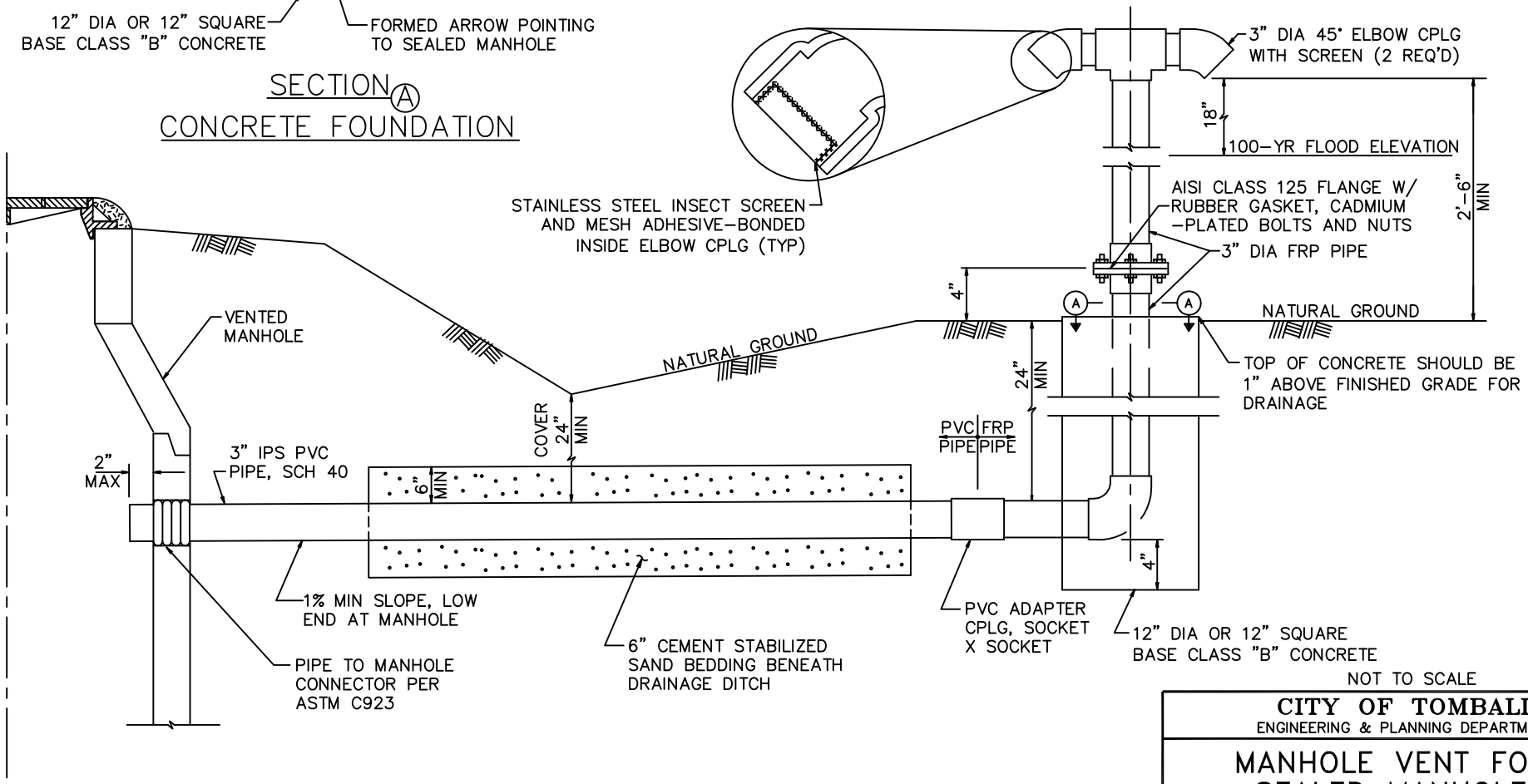

NOT TO SCALE

CITY OF TOMBALL
ENGINEERING & PLANNING DEPARTMENT

MANHOLE VENT FOR SEALED MANHOLE

APPROVED BY COT:

ENGINEERING & PLANNING DEPARTMENT
EFFECTIVE JULY 1, 2010

SHEET 001 OF 001 | DWG NO: COT WW-12

NOTES:

1. SEAT MANHOLE FRAME IN SEALANT PER STANDARD SPECIFICATIONS.
2. IF FORCE MAIN HAS BENDS WITHIN 25 FT OF MANHOLE, EXTEND RESTRAINED JOINTS TO 25 FT MINIMUM UPSTREAM OF BEND.
3. OMIT CEMENT MORTAR WHEN MANHOLE IS LOCATED IN PAVED AREA.
4. MINIMUM REINFORCING IN BASE SHALL BE #5 @ 8" O.C.E.W.
5. PRECAST RINGS SHALL BE PROVIDED FOR A COMBINED ADJUSTMENT HEIGHT OF AT LEAST 12". THE TOTAL HEIGHT OF THE ADJUSTMENT RINGS SHALL NOT EXCEED 1'–6".

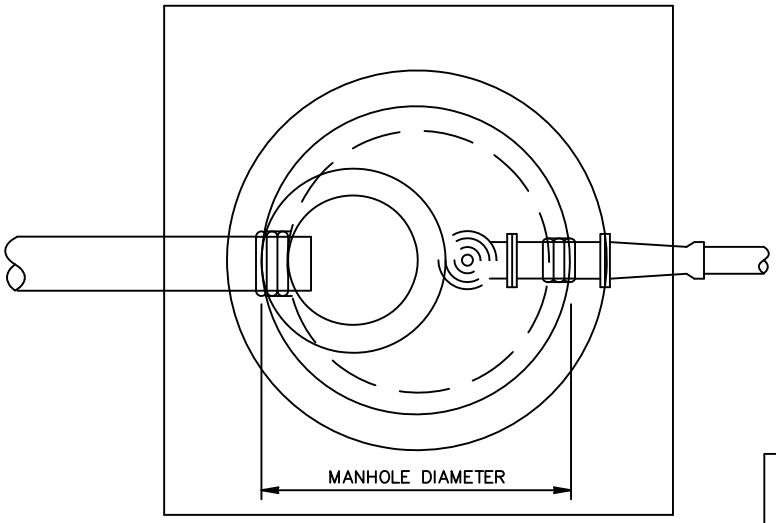

PLAN VIEW

NOTES TO SPECIFIER:

1. INDICATE SIZE OF FORCE MAIN, REDUCER AND DISCHARGE PIPE EITHER ON THIS DETAIL OR ON PLAN AND PROFILE.
2. PROVIDE INVERT ELEVATIONS OR FORCE MAIN AND SEWER CONNECTIONS TO MH, ON THIS DETAIL OR PLAN AND PROFILE.
3. THIS DETAIL IS TO BE USED ONLY WHEN THERE ARE NO INTERSECTING GRAVITY SEWERS.
4. DETAIL MAY BE REVISED TO ORIENT INCOMING FORCE MAIN AT OTHER ANGLES RELATIVE TO GRAVITY SEWER.
5. IF LENGTH OF DISCHARGE DROP BELOW FLANGED TEE FITTING EXCEEDS 7 TIMES DISCHARGE DIAMETER, PROVIDE STAINLESS STEEL OR FRP PIPE SUPPORT.

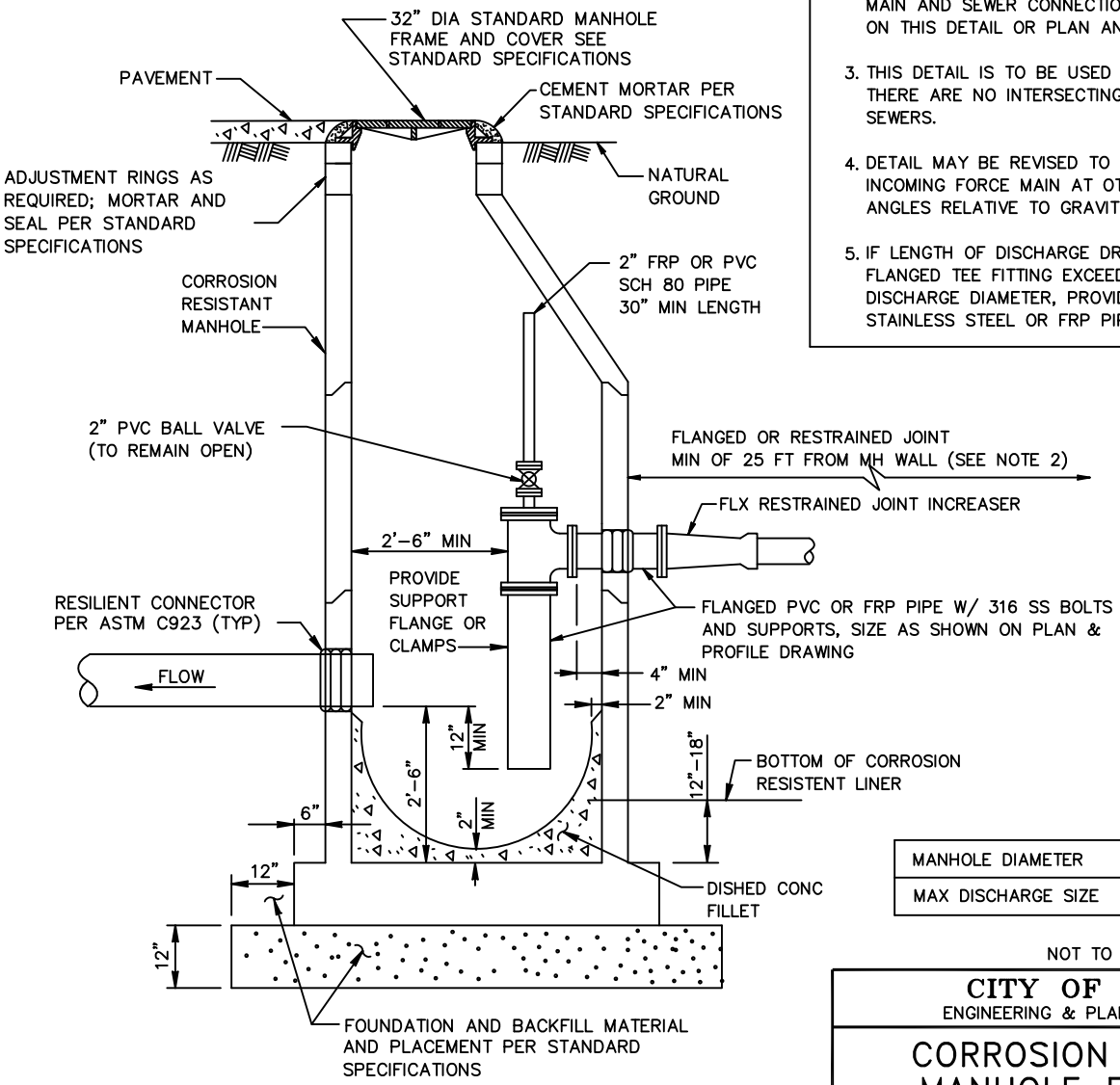

ELEVATION VIEW

MANHOLE DIAMETER	4'–0"	5'–0"	6'–0"
MAX DISCHARGE SIZE	6"	14"	24"

NOT TO SCALE

CITY OF TOMBALL
ENGINEERING & PLANNING DEPARTMENT

CORROSION RESISTANT MANHOLE FOR FORCE MAIN DISCHARGE

APPROVED BY COT:

ENGINEERING & PLANNING DEPARTMENT
EFFECTIVE JULY 1, 2010

SHEET 001 OF 001 | DWG NO: COT WW–13

CAD FILE PATH:

NOTES TO SPECIFIER:

1. CHECK THAT FORCE MAIN BURIAL DEPTH AT AIR VALVE MANHOLE WILL PROVIDE 1'–0" CLEAR SPACE OVER VALVE INSIDE MANHOLE.
2. SHOW STATION LOCATION OR MANHOLE, TOP ELEV, AND VALVE SIZE ON PLAN & PROFILE SHEET.
3. INCLUDE ALSO VENTED MH DETAIL FOR AIR & VACUUM VALVE INSTALLATIONS.

NOTES:

1. AIR VALVE MAY BE AIR RELEASE OR AIR AND VACUUM RELEASE VALVE AS NOTED ON PLAN AND PROFILE SHEET.
2. SEE STANDARD SPECIFICATIONS FOR AIR VALVE ASSEMBLY REQUIREMENTS.
3. PROVIDE LINED DUCTILE IRON PIPE, THICK. CLASS 53, FOR FORCE MAIN WITHIN 12" OF OUTSIDE FACE OF MANHOLE. JOINTS WITHIN MANHOLE MAY BE FLANGED (AS SHOWN) OR GROOVED (PER ASTM 606) WITHIN MANHOLE, WITH 316 STAINLESS STEEL BOLTS.
4. MANHOLE TOP MAY BE CONCENTRIC CONE, ECCENTRIC CONE, OR FLAT TOP WITH ECCENTRIC OPENING. PROVIDE 32" FRAME & COVER. ORIENT ECCENTRIC OPENING OPPOSITE SIDE FROM AIR VALVE.
5. PROVIDE VENTED MANHOLE FOR AIR AND VACUUM VALVE INSTALLATIONS AND AT LOCATIONS INDICATED ON THE DRAWINGS.

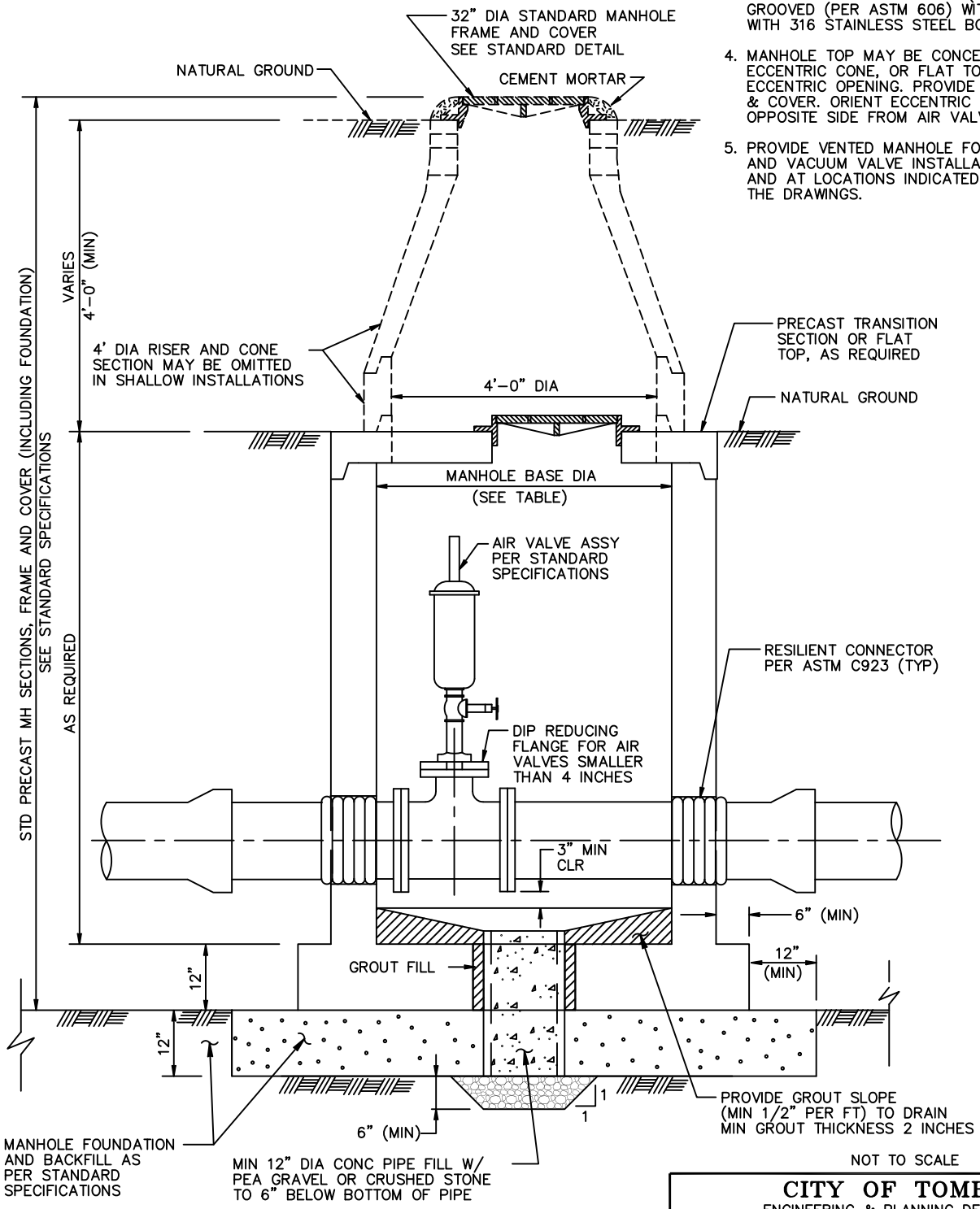

NOT TO SCALE

SECTION

TABLE

MANHOLE BASE DIAMETER (FT)	MAX FORCE MAIN DIAMETER
5	8
6	16
8	36

CITY OF TOMBALL
ENGINEERING & PLANNING DEPARTMENT

AIR RELEASE OR AIR VACUUM RELEASE VALVE MANHOLE

APPROVED BY COT:

ENGINEERING & PLANNING DEPARTMENT
EFFECTIVE JULY 1, 2010

SHEET 001 OF 001 | DWG NO: COT WW–14

CAD FILE PATH:

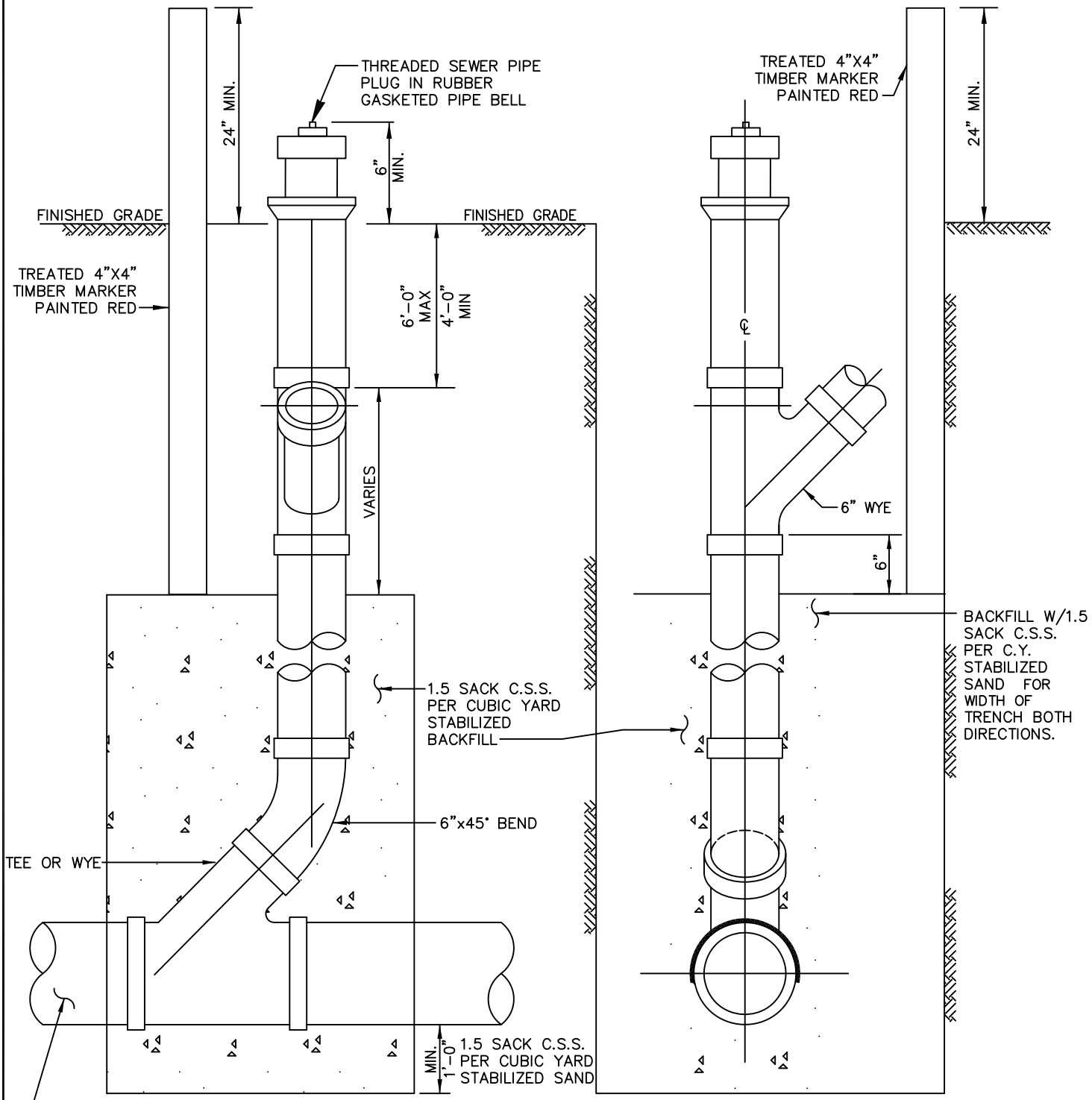

STACK DETAIL

NOT TO SCALE

NOTES:

A.) NO STACKS ON MAINS OVER 18' DEEP OR IN WET SAND CONDIITIONS.

B.) ALL STACK CONNECTIONS SHALL BE IN-LINE FITTINGS.

CITY OF TOMBALL
ENGINEERING & PLANNING DEPARTMENT

SANITARY SEWER STANDARD STACK CONSTRUCTION DETAILS

APPROVED BY COT:

ENGINEERING & PLANNING DEPARTMENT
EFFECTIVE JULY 1, 2010

SHEET 001 OF 001 | DWG NO: COT WW-15

CAD FILE PATH:

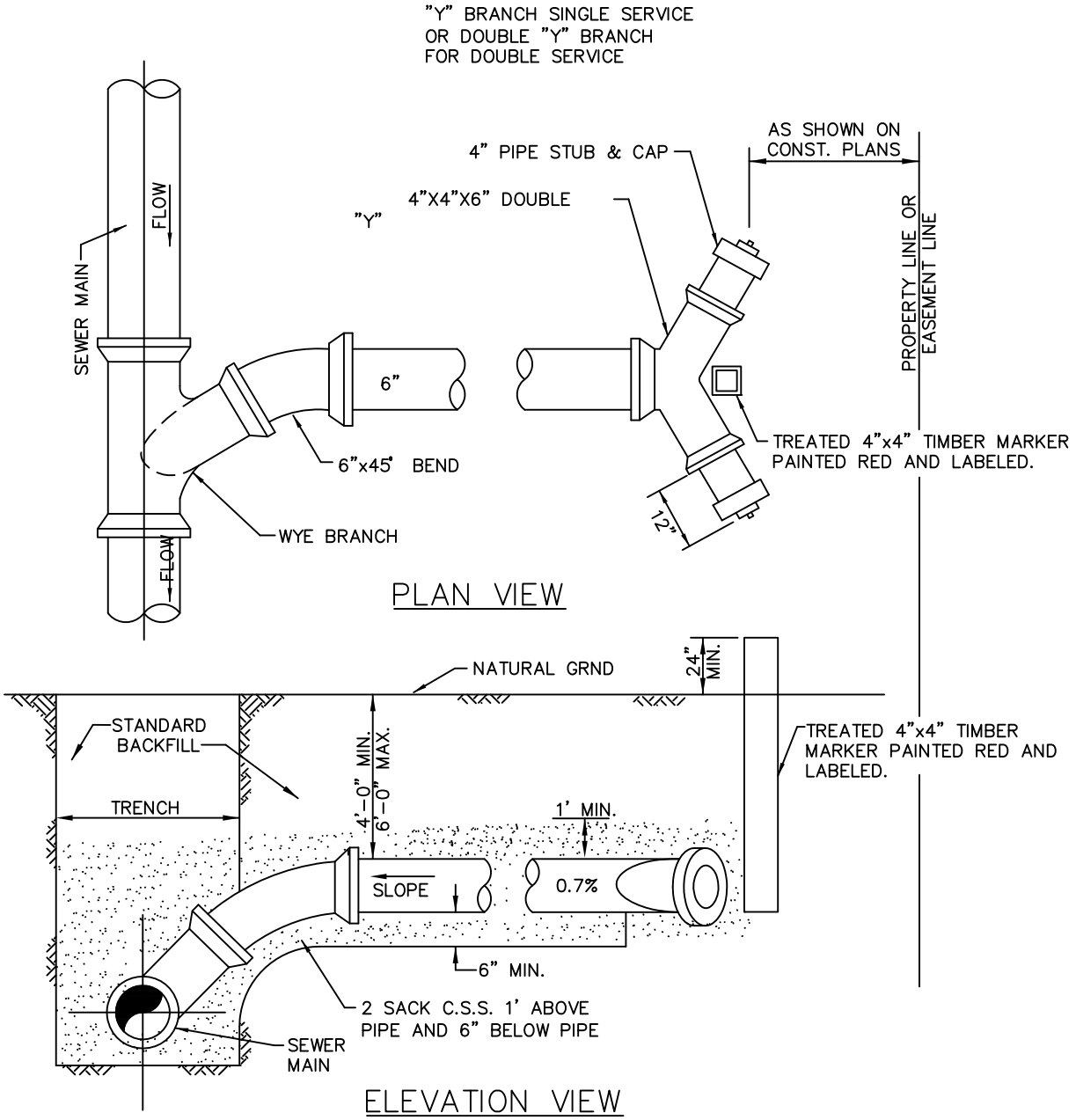

SANITARY SEWER SERVICE CONNECTION

NOT TO SCALE

CITY OF TOMBALL
ENGINEERING & PLANNING DEPARTMENT

SANITARY SEWER STANDARD SERVICE CONNECTION CONSTRUCTION DETAILS

APPROVED BY COT:

ENGINEERING & PLANNING DEPARTMENT
EFFECTIVE JULY 1, 2010

SHEET 001 OF 001 | DWG NO: COT WW-16

CAD FILE PATH:

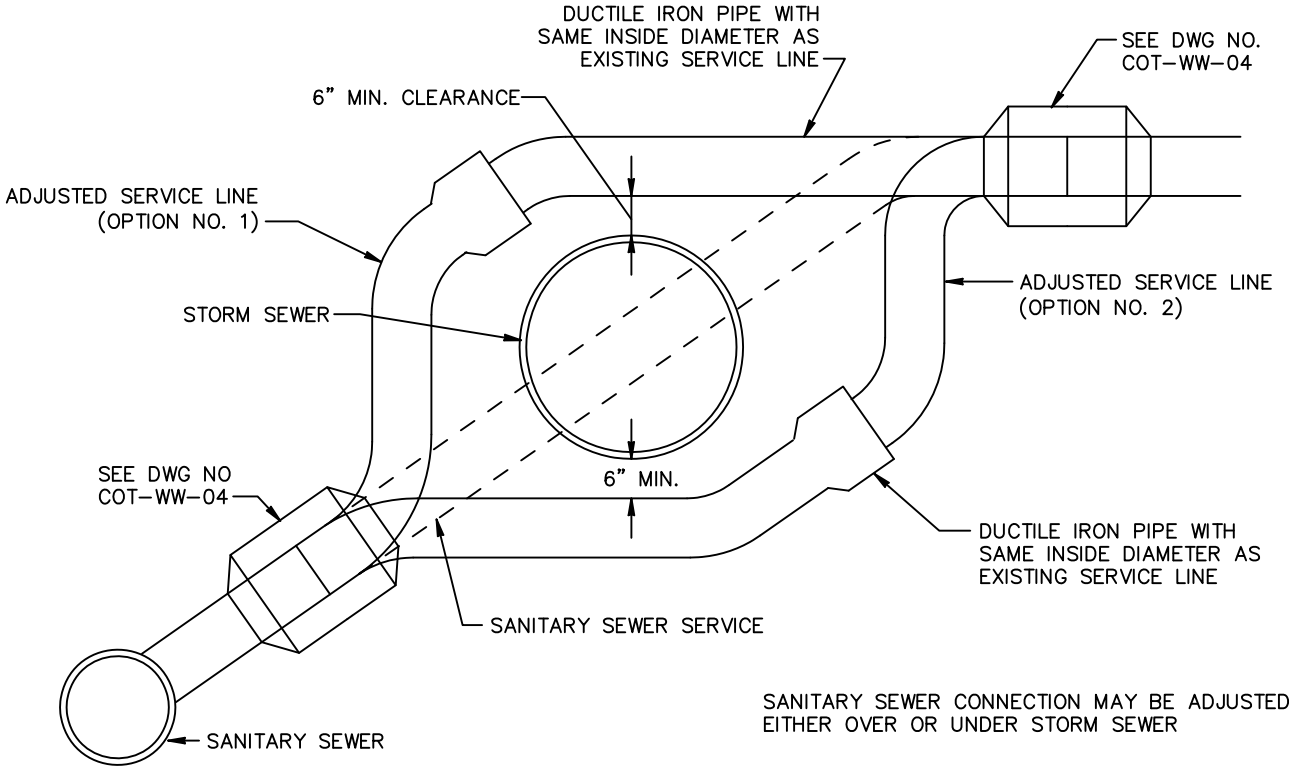

SANITARY SEWER CONNECTION MAY BE ADJUSTED
EITHER OVER OR UNDER STORM SEWER

NOT TO SCALE

CITY OF TOMBALL
ENGINEERING & PLANNING DEPARTMENT

SANITARY SEWER SERVICE LINE ADJUSTMENT FOR STORM SEWER CONFLICTS

APPROVED BY COT:

ENGINEERING & PLANNING DEPARTMENT
EFFECTIVE JULY 1, 2010

SHEET 001 OF 001 | DWG NO: COT WW–17

CAD FILE PATH:

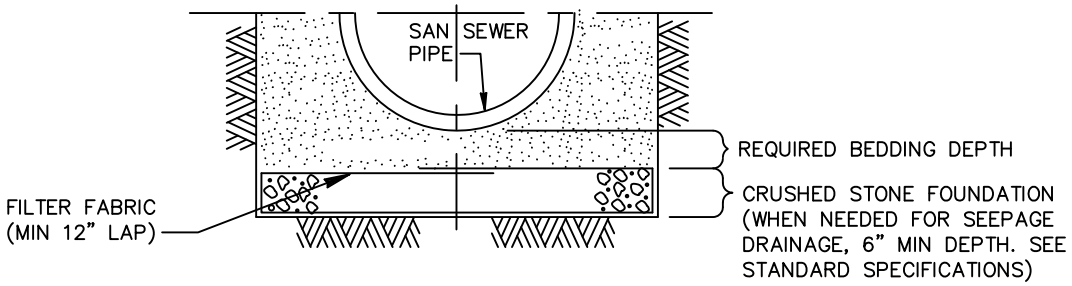

CROSS–SECTION OF CRUSHED STONE FOUNDATION

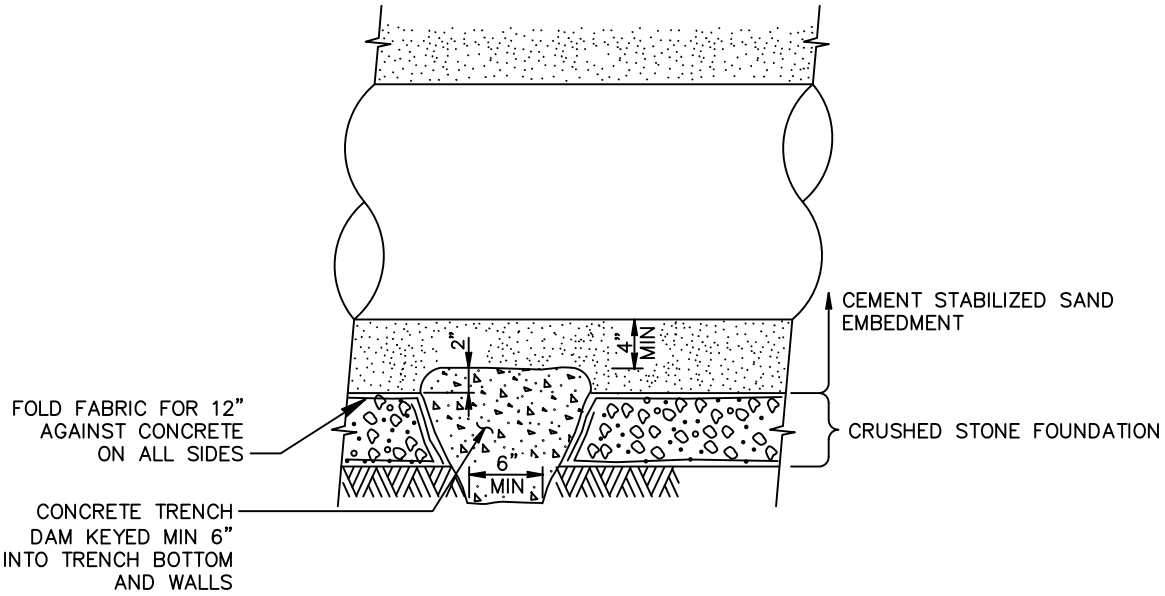

LONGITUDINAL SECTION ALONG PIPE ℄ AT FOUNDATION TRENCH DAM

NOTES:

1. ACTUAL SHAPE OF CONCRETE TRENCH DAM CROSS SECTION MAY BE DETERMINED BY CONTRACTOR IN FIELD, MEETING MINIMUM THICKNESS AND KEY DEPTH REQUIREMENTS.
2. THIS DETAIL SHALL BE USED WITH CEMENT STABILIZED SAND EMBEDMENT, OR OTHER CLASS II EMBEDMENT, IN WET STABLE TRENCH CONDITIONS.
3. PLACE TRENCH DAMS IN CLASS I EMBEDMENTS AT THE MIDPOINT OF LINE SEGMENTS LONGER THAN 100 FEET BETWEEN MANHOLES.

NOT TO SCALE

CITY OF TOMBALL
ENGINEERING & PLANNING DEPARTMENT

SANITARY CRUSHED STONE FOUNDATION FOR WET STABLE TRENCH

APPROVED BY COT:

ENGINEERING & PLANNING DEPARTMENT
EFFECTIVE JULY 1, 2010

SHEET 001 OF 001 | DWG NO: COT WW–18

CAD FILE PATH:

NOTES:

1. WHERE WET SAND IS ENCOUNTERED, REINFORCED CONCRETE PIPE SEWERS SHALL BE CONSTRUCTED USING APPROVED SPECIAL DESIGN AS SHOWN ON DRAWINGS.
2. MIN TRENCH WIDTH SHALL BE PIPE OD PLUS AN ALLOWANCE "A" FOR THE NOMINAL PIPE SIZE:

NOMINAL PIPE SIZE	"A"
18" TO 30"	24"
OVER 30"	36"

3. MAX TRENCH WIDTH SHALL NOT BE GREATER THAN MIN TRENCH WIDTH PLUS 24 INCHES, UNLESS OTHERWISE NOTED.
4. SELECT BACKFILL FOR RIGID PAVEMENT; FLEXIBLE BASE MATERIAL FOR ASPHALT PAVEMENT.

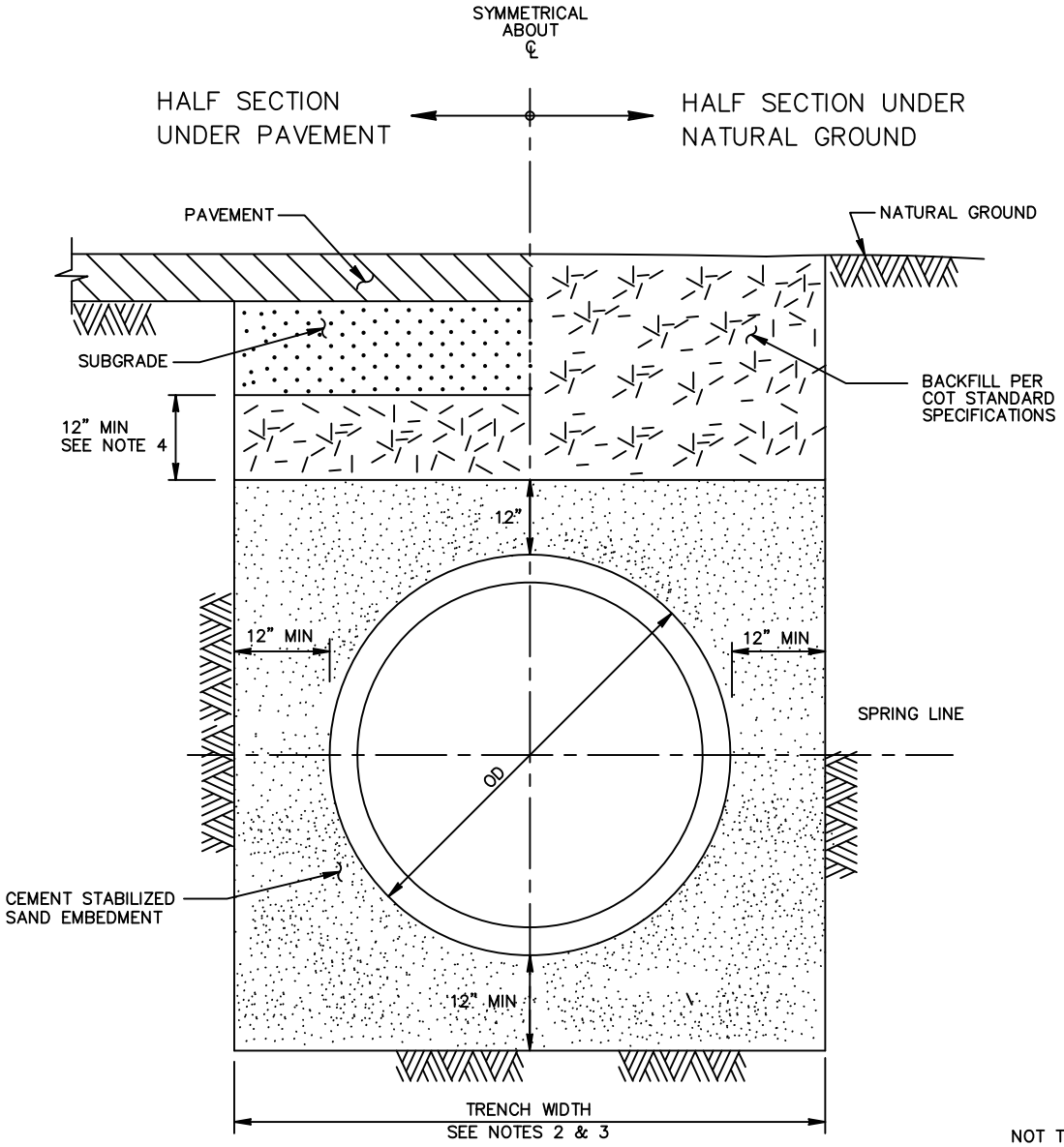

NOT TO SCALE

CITY OF TOMBALL
ENGINEERING & PLANNING DEPARTMENT

SANITARY BEDDING & BACKFILL FOR DRY STABLE TRENCH

APPROVED BY COT:

ENGINEERING & PLANNING DEPARTMENT
EFFECTIVE JULY 1, 2010

SHEET 001 OF 001 | DWG NO: COT WW-19

CAD FILE PATH: