NOTES:

1. ALL INTERSECTIONS WHERE A STOP SIGN IS LOCATED SHALL HAVE A STOP BAR. STOP BARS SHALL BE LOCATED WHERE PEDESTRIAN CROSSWALKS ARE PROVIDED, 1'–4" BEHIND CROSSWALKS.
2. STOP BARS SHALL BE 24" WIDE, AND CONSIST OF SOLID WHITE LINES EXTENDING ACROSS APPROACH LANES TO INDICATE THE POINT AT WHICH THE STOP IS INTENDED OR REQUIRED TO BE MADE.
3. ON APPROACH – BEGINNING WITH STOP BAR, INSTALL A 4" WIDE SOLID WHITE LINE FOR 50 FT BACK FROM STOP BAR SKIP 25' AND BEGIN NORMAL LANE LINES.
4. ON EXIT – BEGINNING WITH CROSSWALK, OR 12' FROM CURB LINE OF INTERSECTING STREET, INSTALL A 4" WIDE SOLID WHITE LINE FOR 50 FT., AND BEGIN NORMAL LANE LINE.
5. CROSSWALKS SHALL BE A MINIMUM INSIDE WIDTH OF 5' (FT.). AT LOCATIONS WHERE ADDITIONAL VISIBILITY IS REQUIRED, WHERE TRAFFIC CONTROL DEVICES ARE NOT PRESENT, AND IN SCHOOL ZONES CONTINENTAL CROSSWALKS SHALL BE USED.
6. ALL PAVEMENT MARKINGS AT INTERSECTIONS SHALL BE THERMOPLASTIC IN ACCORDANCE WITH COT APPROVED PRODUCT LIST.
7. PAVEMENT MARKINGS MUST BE SHOWN ON THE APPROVED CONSTRUCTION PLANS. ALL PAVEMENT MARKINGS MUST BE RETRO–REFLECTIVE MATERIAL APPLIED TO THE ROAD SURFACE IN A MOLTEN STATE BY SCREED/EXTRUSION, SUSPENDED EXTRUSION, OR SPRAY MEANS, WITH A SURFACE APPLICATION OF GLASS BEADS.
8. THE COLOR OF RAISED PAVEMENT MARKERS UNDER BOTH DAYLIGHT AND NIGHTTIME CONDITIONS SHALL CONFORM TO THE COLOR OF THE MARKING FOR WHICH THEY SERVE AS A POSITIONING GUIDE OR FOR WHICH THEY SUPPLEMENT OR SUBSTITUTE.
9. ALL TRAFFIC BUTTONS AND MARKERS SHALL BE INSTALLED ADJACENT TO STRIPES (APPROX. 2").
10. ALL BUTTONS SHALL BE INSTALLED WITH AN APPROVED EXPOXY.
11. A BLUE REFLECTORIZED BUTTON SET 6" OFF CENTERLINE OF ROADWAY SHALL BE INSTALLED ADJACENT TO ALL FIRE HYDRANTS.
12. PAVEMENT SURFACE AREAS PRIOR TO PLACEMENT OF PAVEMENT MARKINGS, AND/OR RAISED PAVEMENT MARKERS SHALL BE CLEANED IN ACCORDANCE WITH C.O.M.C. STANDARDS. CONCRETE SURFACES SHALL BE CLEANED BY ABRASIVE BLASTING MEDIUM. ASPHALT PAVEMENT SURFACES SHALL BE CLEANED BY BRUSHING, WASHING, COMPRESSED AIR, AND/OR HIGH–PRESSURE WATER. AREAS MUST BE FREE OF CURING MEMBRANCE, DIRT, GREASE, LOOSE AND/OR FLAKING EXISTING MARKERS AND OTHER FORMS OF DEBRIS.
13. ALL ESPLANADE NOSES, AND CURBS IN LEFT TURN BAY'S SHALL BE BRICK STAMPED OR PAVERS AND SHALL COMPLY WITH THE TEXAS MANUAL ON UNIFORM TRAFFIC DEVICES, A.D.A., T.A.S., AND COT STANDARDS AND ALL REVISIONS THEREOF.
14. ALL ROADWAYS WITHOUT CURB SHALL HAVE A SOLID 4" WHITE REFLECTORIZED STRIPE 12" INSIDE THE EDGE OF PAVEMENT.
15. WITHIN A TANGENT SECTION THE TYPE I–C PAVEMENT MARKERS CAN BE PLACED AT 40' C–C ON ROADWAYS WITHOUT CURB AND GUTTERS.
16. ALL STREET CROSSINGS SHALL COMPLY WITH T.A.S. AND A.D.A., SEE HANDICAP CROSS DETAIL.
17. ALL PAVEMENT MARKINGS, AND/OR RAISED PAVEMENT MARKERS SHALL COMPLY WITH THE TEXAS MANUAL ON UNIFORM TRAFFIC DEVICES, A.D.A., T.A.S., AND C.O.M.C. STANDARDS AND ALL REVISIONS THEREOF.
18. ALL MARKINGS SHALL HAVE A UNIFORM CROSS–SECTION, AND THE DENSITY AND QUALITY OF THE MARKING'S SHALL BE UNIFORM THROUGHOUT THEIR THICKNESS.
19. PAVEMENT MARKING'S PLACED THAT ARE NOT IN ALIGNMENT OR SEQUENCE, AS SHOWN ON THE PLANS OR STATED IN THE PROJECT SPECIFICATIONS SHALL BE REMOVED AND REPLACED AT THE CONTRACTOR'S EXPENSE.
20. FOR SKEW INTERSECTIONS AND STREET WIDTHS NOT SHOWN, COORDINATE WITH THE COT DEPARTMENT OF ENGINEERING & PLANNING.

NOT TO SCALE

CITY OF TOMBALL
ENGINEERING & PLANNING DEPARTMENT

PAVEMENT MARKINGS PLACEMENT NOTES

APPROVED BY COT:

ENGINEERING & PLANNING DEPARTMENT
EFFECTIVE JULY 1, 2010

SHEET 001 OF 001 | DWG NO: COT STR–01

CAD FILE PATH:

CAD FILE PATH:

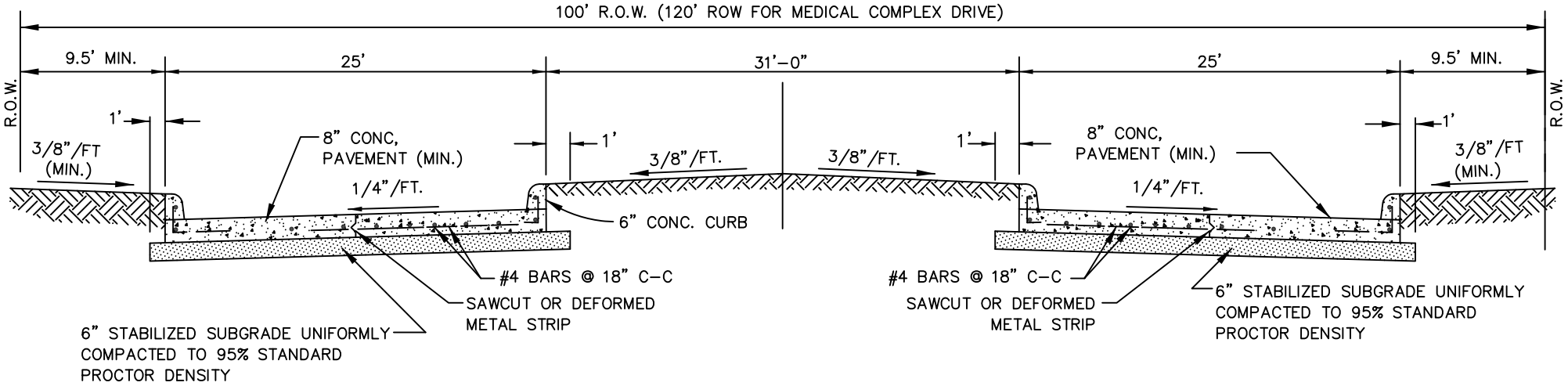

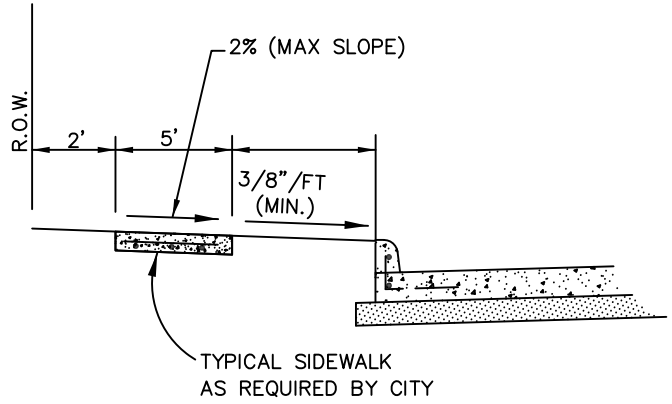

NOTE:

1. PAVEMENT AND SUBGRADE DESIGN SHALL BE SUPPORTED BY A GEOTECHNICAL INVESTIGATION AND PAVEMENT DESIGN ANALYSIS.
2. WIRE MESH IS NOT AN ACCEPTABLE FORM OF REINFORCEMENT.
3. FINAL SECTION SUBJECT TO GEOTECHNICAL ENGINEER RECOMMENDATION

NOT TO SCALE

CITY OF TOMBALL
ENGINEERING & PLANNING DEPARTMENT

ROADWAY SECTION MAJOR ARTERIAL BOULEVARD WITH MEDIAN

APPROVED BY COT:

ENGINEERING & PLANNING DEPARTMENT
EFFECTIVE JULY 1, 2010

SHEET 001 OF 001 | DWG NO: COT STR-02

CAD FILE PATH:

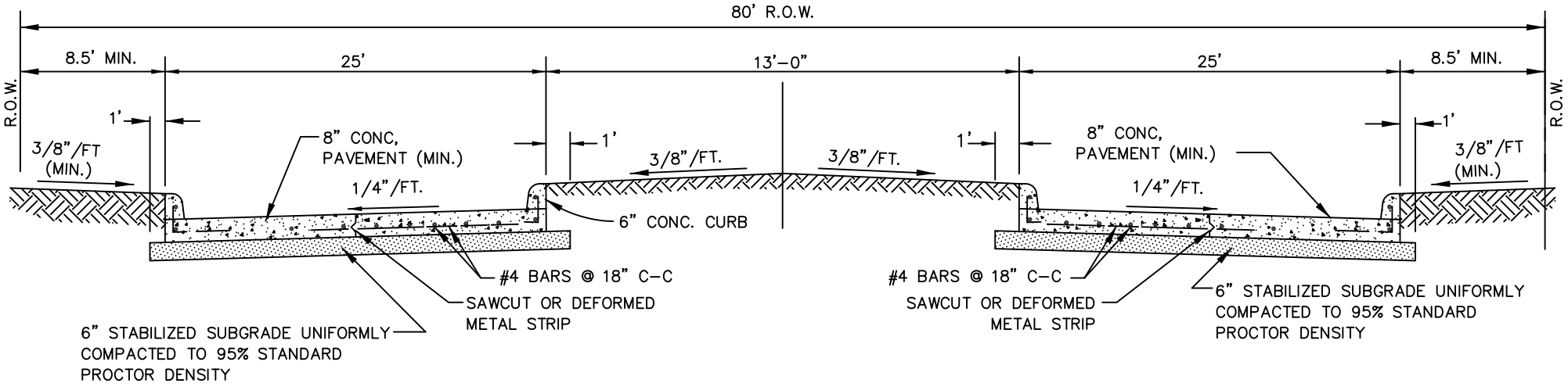

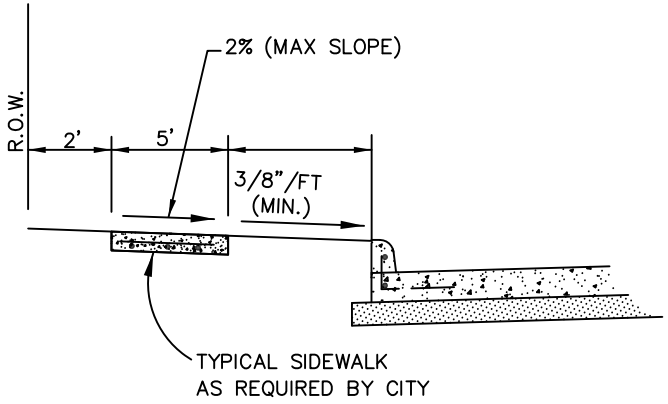

NOTE:

1. PAVEMENT AND SUBGRADE DESIGN SHALL BE SUPPORTED BY A GEOTECHNICAL INVESTIGATION AND PAVEMENT DESIGN ANALYSIS.
2. WIRE MESH IS NOT AN ACCEPTABLE FORM OF REINFORCEMENT.

NOT TO SCALE

CITY OF TOMBALL
ENGINEERING & PLANNING DEPARTMENT

ROADWAY SECTION MINOR ARTERIAL BOULEVARD WITH MEDIAN

APPROVED BY COT:

ENGINEERING & PLANNING DEPARTMENT
EFFECTIVE JULY 1, 2010

SHEET 001 OF 001 | DWG NO: COT STR-03

CAD FILE PATH:

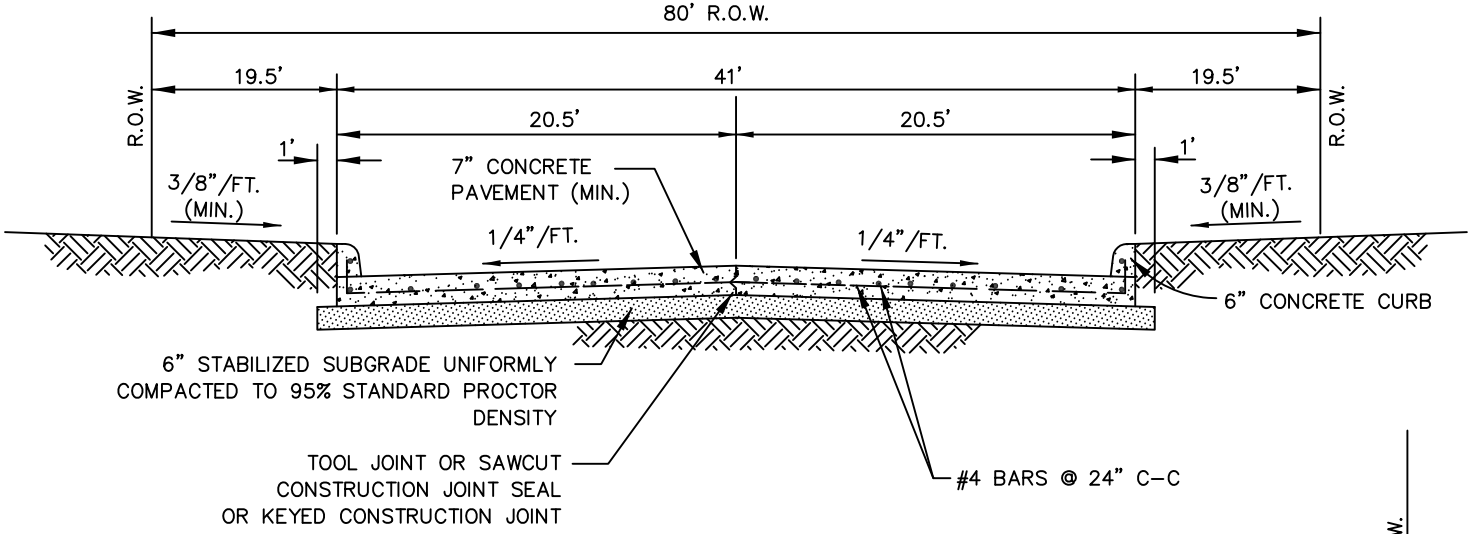

41' WIDE CURBED CONCRETE PAVEMENT

NOTES:

1. PAVEMENT AND SUBGRADE DESIGN SHALL BE SUPPORTED BY A GEOTECHNICAL INVESTIGATION AND PAVEMENT DESIGN ANALYSIS.
2. WIRE MESH IS NOT AN ACCEPTABLE FORM OF REINFORCEMENT.
3. APPROVAL FROM THE CITY MUST BE OBTAINED PRIOR TO IMPLEMENTING THIS ROADWAY SECTION IN LIEU OF A DIVIDED BOULEVARD SECTION.

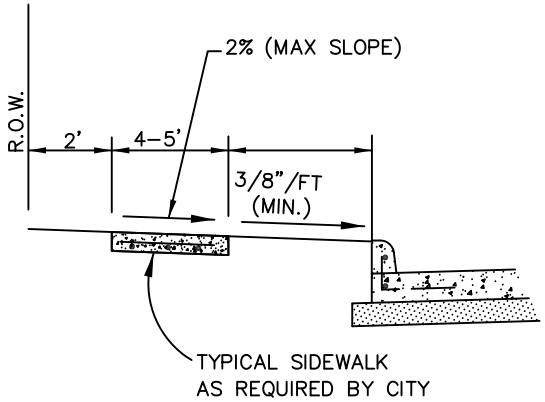

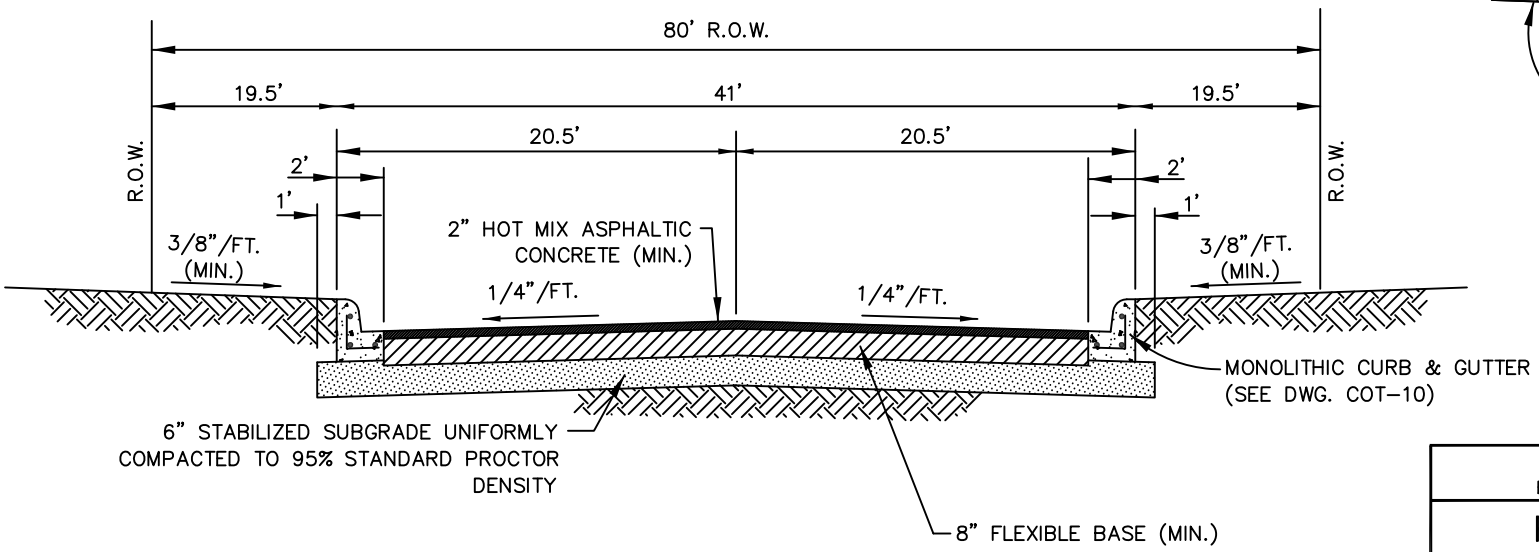

41' WIDE CURBED, ASPHALTIC CONCRETE STREET

NOT TO SCALE

CITY OF TOMBALL
ENGINEERING & PLANNING DEPARTMENT

ROADWAY SECTION MINOR ATERIAL UNDIVIDED OPTION

APPROVED BY COT:

ENGINEERING & PLANNING DEPARTMENT
EFFECTIVE JULY 1, 2010

SHEET 001 OF 001 | DWG NO: COT STR-04

CAD FILE PATH:

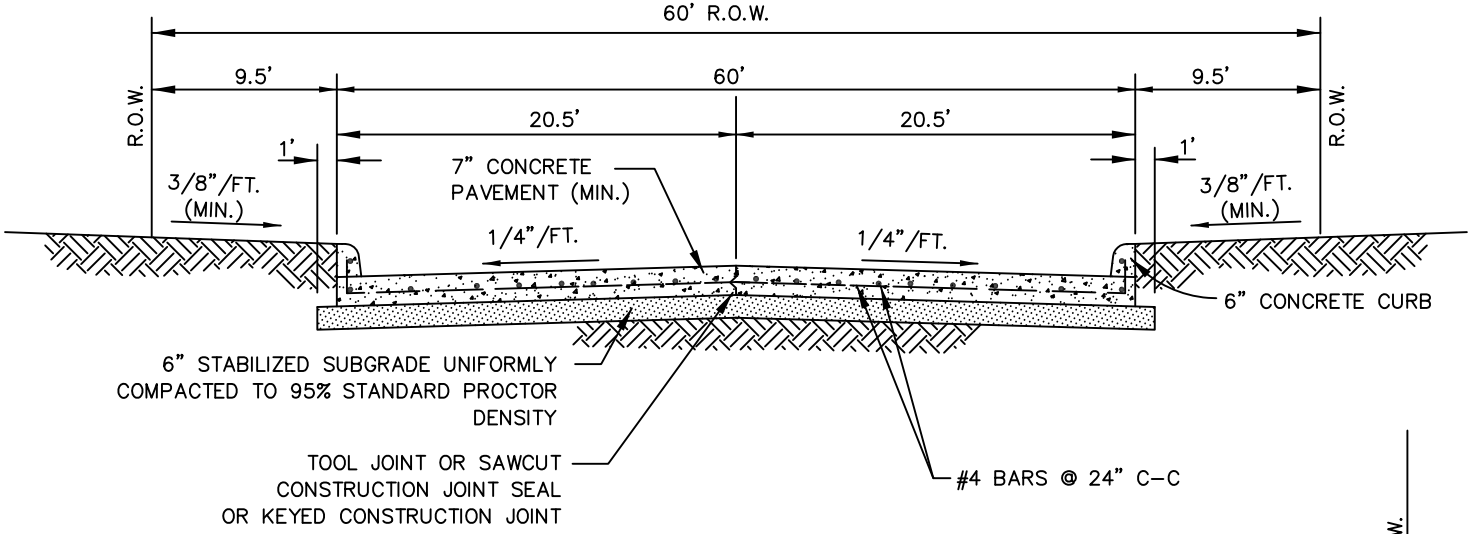

41' WIDE CURBED CONCRETE PAVEMENT

NOTES:

1. PAVEMENT AND SUBGRADE DESIGN SHALL BE SUPPORTED BY A GEOTECHNICAL INVESTIGATION AND PAVEMENT DESIGN ANALYSIS.
2. WIRE MESH IS NOT AN ACCEPTABLE FORM OF REINFORCEMENT.

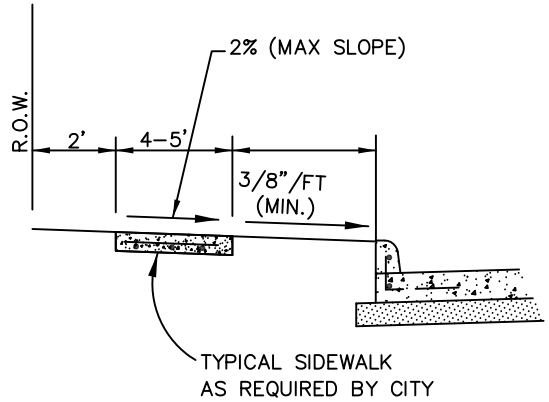

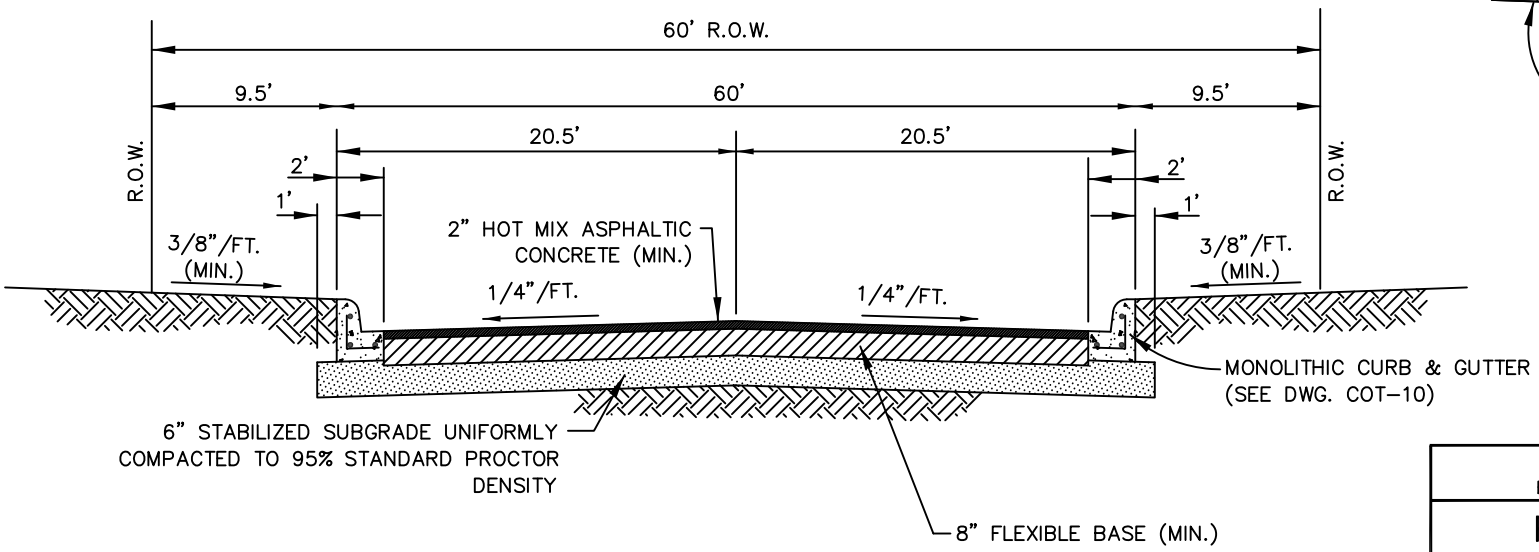

41' WIDE CURBED, ASPHALTIC CONCRETE STREET

NOT TO SCALE

CITY OF TOMBALL
ENGINEERING & PLANNING DEPARTMENT

ROADWAY SECTION
COLLECTOR

APPROVED BY COT:

ENGINEERING & PLANNING DEPARTMENT
EFFECTIVE JULY 1, 2010

SHEET 001 OF 001 | DWG NO: COT STR-05

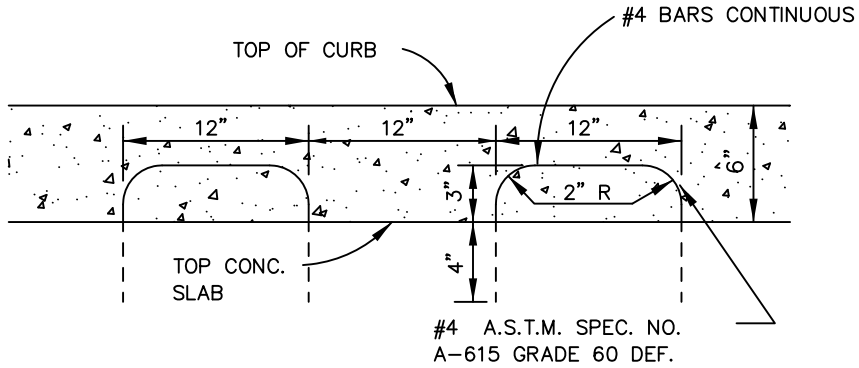

ALTERNATE CURB REINFORCING

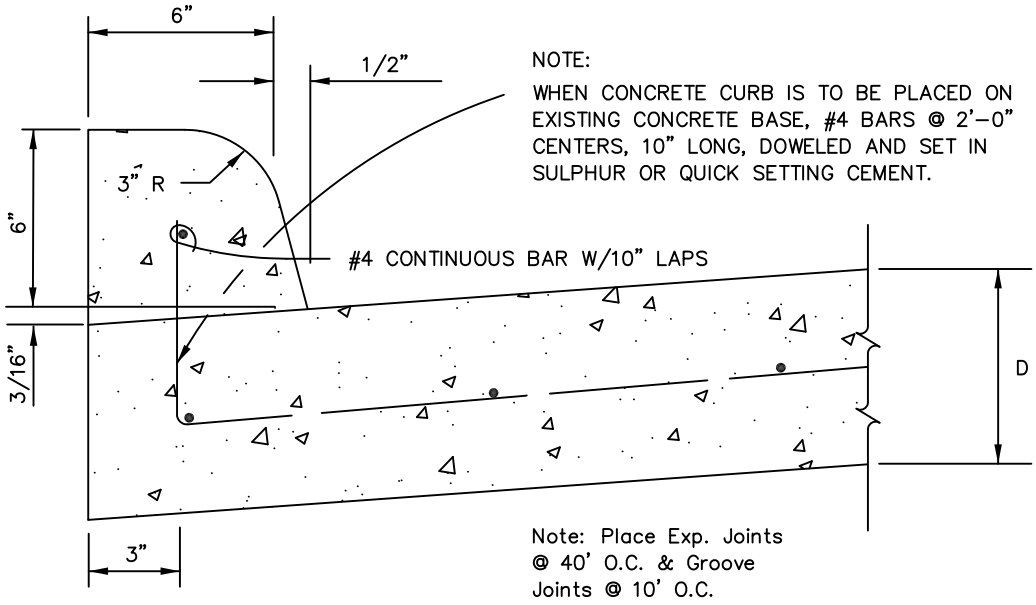

NOTE:
WHEN CONCRETE CURB IS TO BE PLACED ON EXISTING CONCRETE BASE, #4 BARS @ 2'-0" CENTERS, 10" LONG, DOWELED AND SET IN SULPHUR OR QUICK SETTING CEMENT.

Note: Place Exp. Joints @ 40' O.C. & Groove Joints @ 10' O.C.

FINISH TO BE ACCOMPLISHED BY FLOATING, STEEL TROWELLING AND THEN BRUSHING. HAND FINISH NOT REQUIRED WHEN CURB AND GUTTER IS POURED BY A MACHINE, BUT CURB IS TO HAVE THE SAME OUTSIDE DIMENSIONS, AND HAVE A BRUSHED FINISH.

6" CONCRETE CURB

NOT TO SCALE

CITY OF TOMBALL
ENGINEERING & PLANNING DEPARTMENT

CONCRETE
CURB
CONSTRUCTION DETAILS

APPROVED BY COT:

ENGINEERING & PLANNING DEPARTMENT
EFFECTIVE JULY 1, 2010

SHEET 001 OF 001 | DWG NO: COT STR-06

CAD FILE PATH:

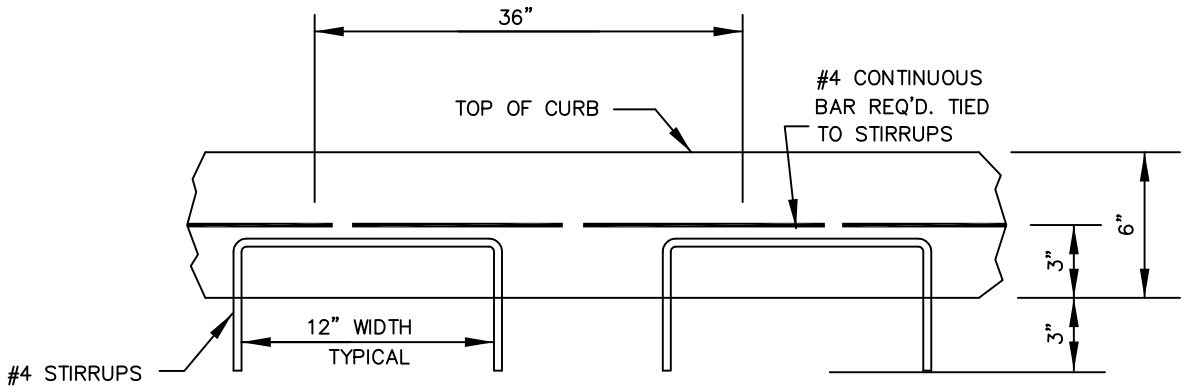

TYPICAL CONCRETE CURB
REINFORCING

NOT TO SCALE

CITY OF TOMBALL
ENGINEERING & PLANNING DEPARTMENT

CURB
REINFORCING
CONSTRUCTION DETAILS

APPROVED BY COT:

ENGINEERING & PLANNING DEPARTMENT
EFFECTIVE JULY 1, 2010

SHEET 001 OF 001 | DWG NO: COT STR-07

CAD FILE PATH:

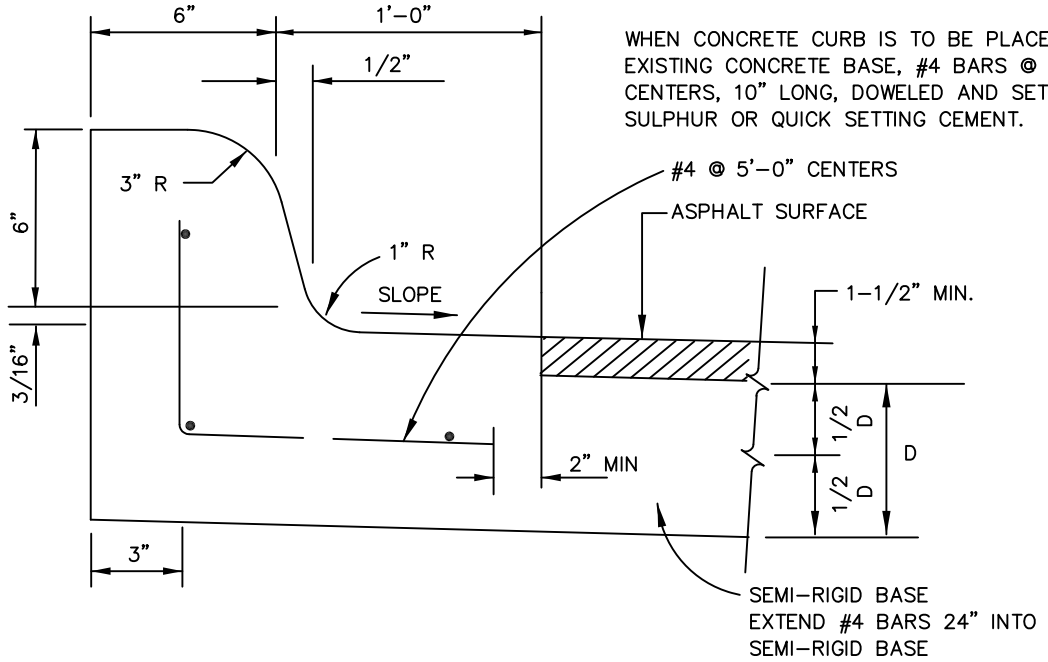

WHEN CONCRETE CURB IS TO BE PLACED ON EXISTING CONCRETE BASE, #4 BARS @ 2'-0" CENTERS, 10" LONG, DOWELED AND SET IN SULPHUR OR QUICK SETTING CEMENT.

FINISH TO BE ACCOMPLISHED BY FLOATING, STEEL TROWELLING AND THEN BRUSHING. HAND FINISH NOT REQUIRED WHEN CURB AND GUTTER IS POURED BY A MACHINE, BUT CURB IS TO HAVE THE SAME OUTSIDE DIMENSIONS, AND HAVE A BRUSHED FINISH.

ESPLANADE CURB & GUTTER

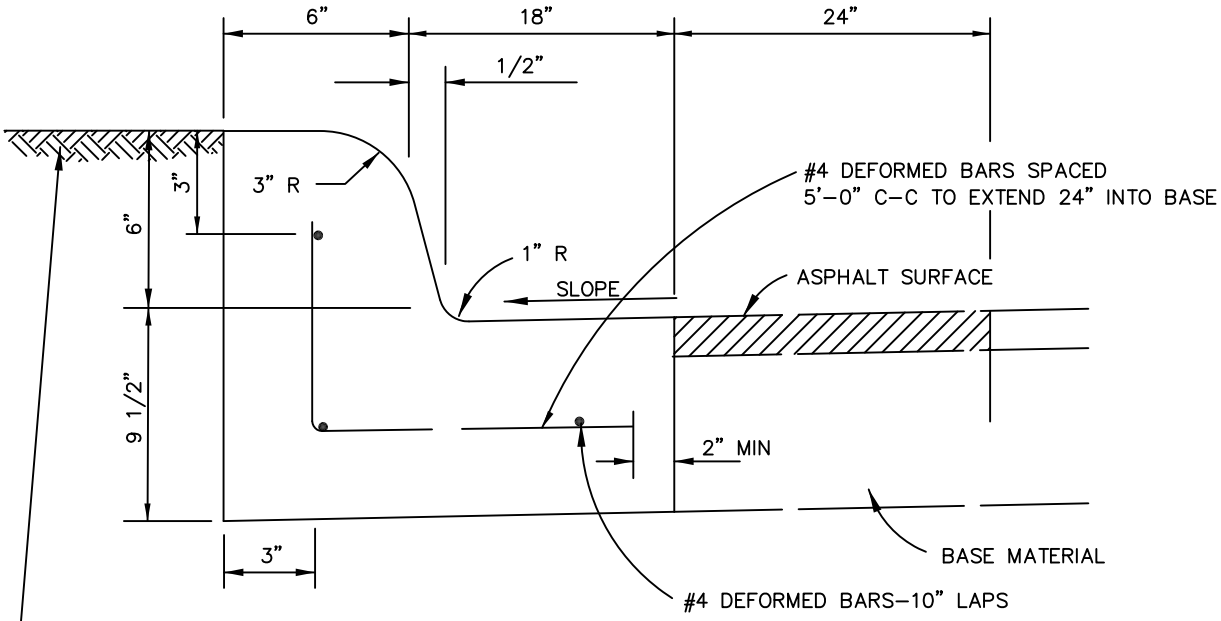

NOTE:
SOIL SHALL BE COMPACTED IN ACCORDANCE WITH SPECIFICATIONS PRIOR TO FURTHER ROADWAY CONSTRUCTION

MONOLITHIC CURB & GUTTER

NOT TO SCALE

CITY OF TOMBALL
ENGINEERING & PLANNING DEPARTMENT

STANDARD MONOLITHIC CONCRETE CURB & GUTTER CONSTRUCTION DETAILS

APPROVED BY COT:

ENGINEERING & PLANNING DEPARTMENT
EFFECTIVE JULY 1, 2010

SHEET 001 OF 001 | DWG NO: COT STR-08

CAD FILE PATH:

4–INCH x 12–INCH LAYDOWN CURB

(REQUIRED CITY ENGINEER APPROVAL)

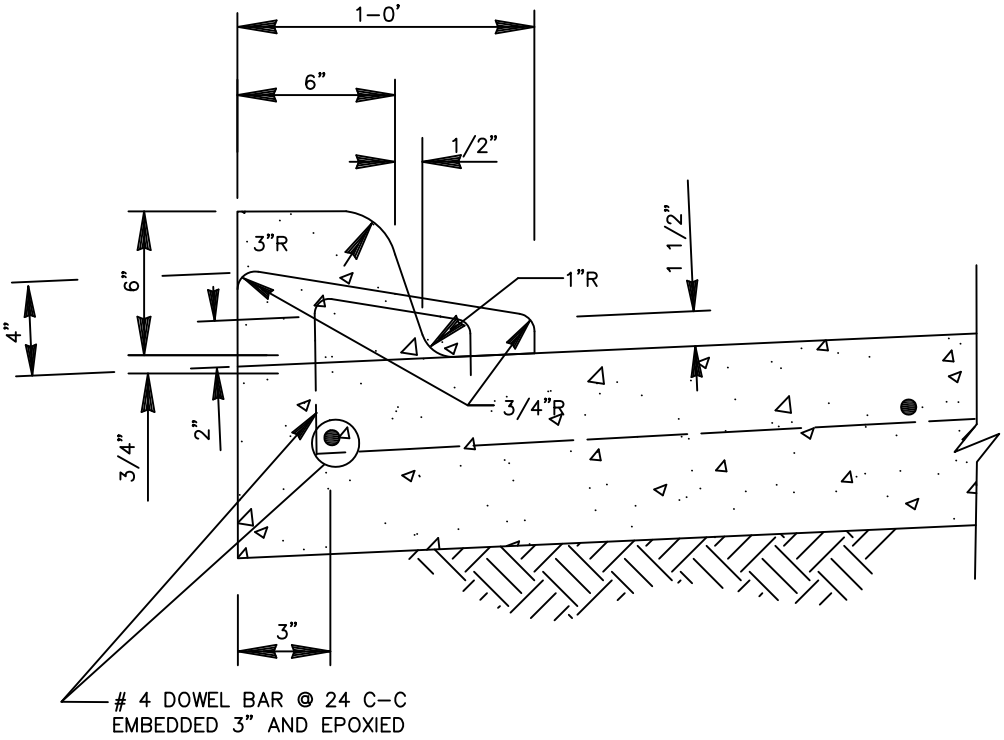

NOTES:

1. 6–INCH CONCRETE CURB TO BE CONSTRUCTED ON ALL ESPLANADES, ISLANDS AND NON–RESIDENTIAL STREETS. RESIDENTIAL STREETS MAY BE CONSTRUCTED WITH EITHER 6–INCH CONCRETE CURB OR 4–INCH x 12–INCH CONCRETE CURB AS NOTED ON PLANS.

2. ALL 4–INCH x 12–INCH CONCRETE CURBS TO BE POURED SEPARATE FROM PROPOSED CONCRETE PAVEMENT.

3. TRANSITIONS FROM 6–INCH CONCRETE CURB TO 4–INCH x 12–INCH CONCRETE CURB TO BE ACCOMPLISHED WITHIN 5 FEET (TYP.), UNLESS OTHERWISE SHOWN. REINFORCING STEEL AS SHOWN IN "4–INCH x 12–INCH TRANSITION CURB" DETAIL IS TO BE INSTALLED.

NOT TO SCALE

CITY OF TOMBALL
ENGINEERING & PLANNING DEPARTMENT

4" X 12"
LAYDOWN CURB
CONSTRUCTION DETAILS

APPROVED BY COT:

ENGINEERING & PLANNING DEPARTMENT
EFFECTIVE JULY 1, 2010

SHEET 001 OF 001 | DWG NO: COT STR–09

CAD FILE PATH:

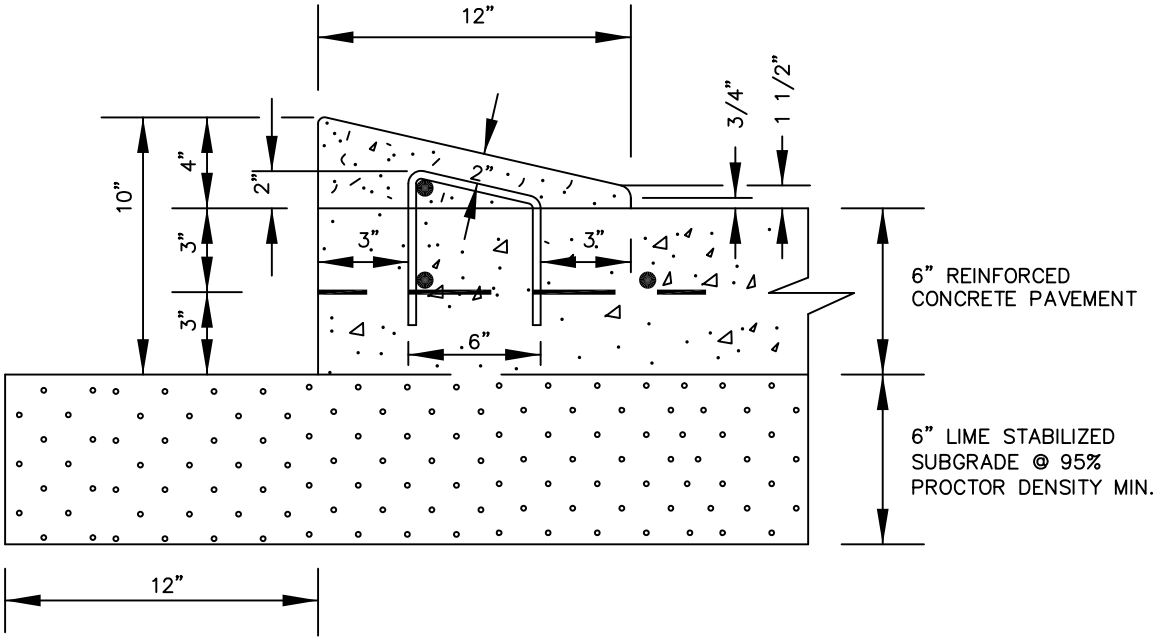

4"x12" MOUNTABLE CONCRETE CURB

(REQUIRED CITY ENGINEER APPROVAL)

NOTES:

1.) 1.0 LBS. OF APPROVED NON-METALLIC FIBER MESH PER C/Y IN 4"X12" CURBS.
2.) #3 RE-BAR STIRRUPS TO BE PLACED AT INTERVALS OF 2' (FT) C-C.
3.) #4 RE-BAR LONGITUDINAL SHALL BE TIED TO EACH STIRRUP
4.) MOUNTABLE CURB ONLY ALLOWED ON < 41' (FT), UNDIVIDED, RESIDENTIAL ROADWAYS WITHIN SUBDIVISIONS.

NOT TO SCALE

CITY OF TOMBALL
ENGINEERING & PLANNING DEPARTMENT

4" X 12" MOUNTABLE CONCRETE CURB CONSTRUCTION DETAILS

APPROVED BY COT:

ENGINEERING & PLANNING DEPARTMENT
EFFECTIVE JULY 1, 2010

SHEET 001 OF 001 | DWG NO: COT STR-10

CAD FILE PATH:

CAD FILE PATH:

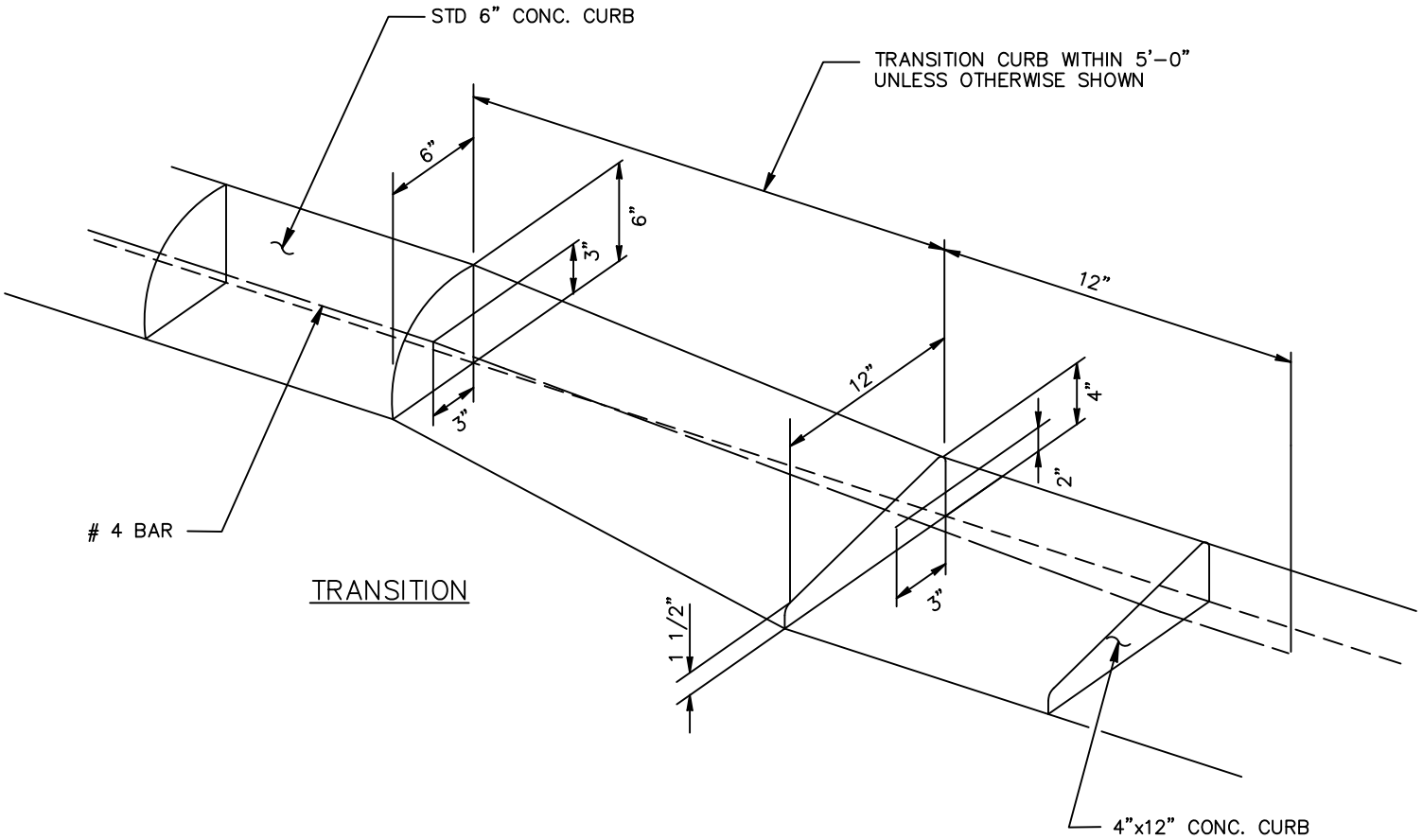

TYPICAL CURB TRANSITION

NOT TO SCALE

CITY OF TOMBALL
ENGINEERING & PLANNING DEPARTMENT

TYPICAL CURB
TRANSITION
CONSTRUCTION DETAILS

APPROVED BY COT:

ENGINEERING & PLANNING DEPARTMENT
EFFECTIVE JULY 1, 2010

SHEET 001 OF 001 | DWG NO: COT STR-11

CAD FILE PATH:

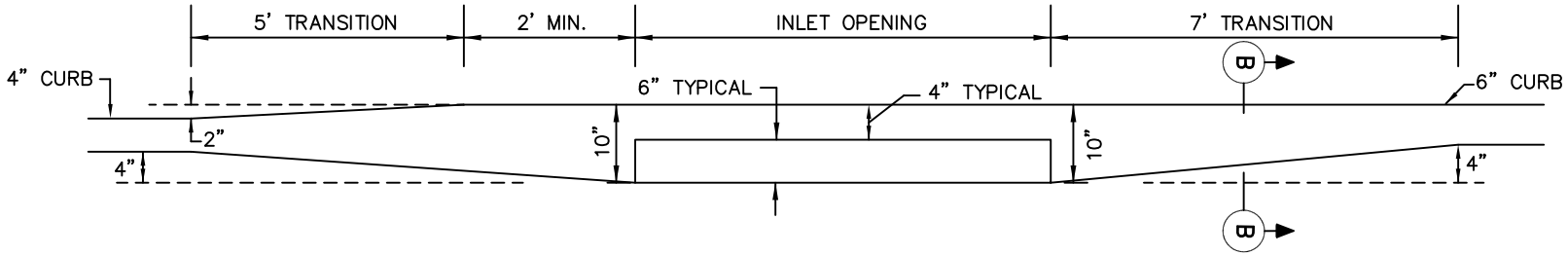

TYPICAL CURB TRANSITION FOR INLET INSTALLATION

NOT TO SCALE

CITY OF TOMBALL
ENGINEERING & PLANNING DEPARTMENT

TYPICAL CURB TRANSITION FOR INLET INSTALLATION CONSTRUCTION DETAIL

APPROVED BY COT:

ENGINEERING & PLANNING DEPARTMENT
EFFECTIVE JULY 1, 2010

SHEET 001 OF 001 | DWG NO: COT SRT-12

CAD FILE PATH:

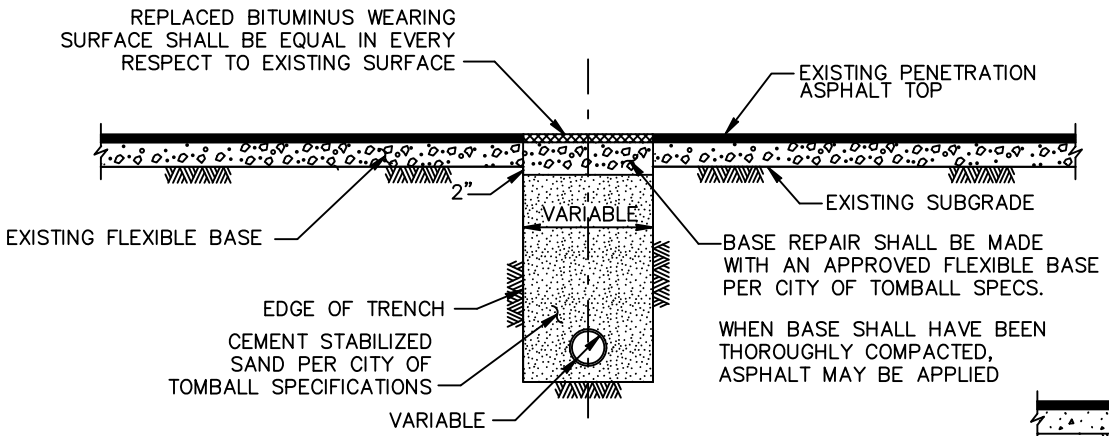

SECTION SHOWING METHOD OF REPAIR OF FLEXIBLE BASE PAVEMENT

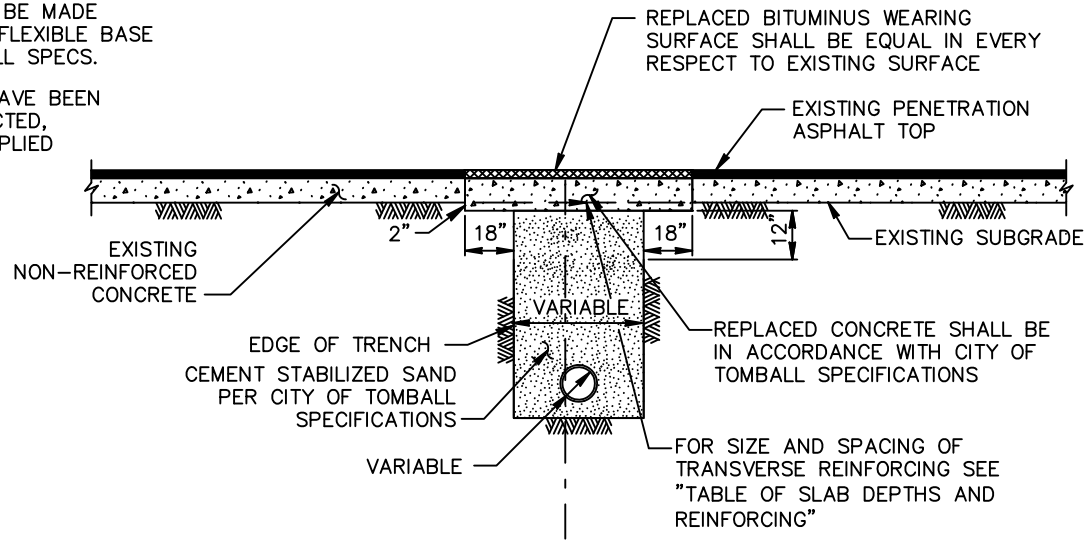

SECTION SHOWING METHOD OF REPAIR OF NON-REINFORCED CONCRETE PAVEMENT

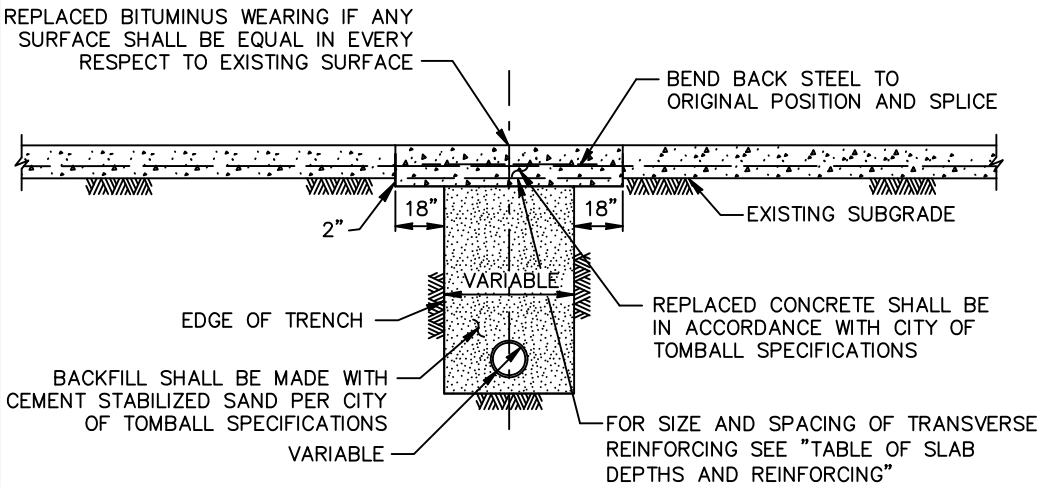

SECTION SHOWING METHOD OF REPAIR OF REINFORCED CONCRETE PAVEMENT

PAVEMENT THICKNESS (INCHES)	BAR SIZE	BAR SPACING (INCHES ON CENTER)
6" AND LESS	#4	24"
8" TO 10"	#5	16"
11" TO 12"	#6	12"

MIN LAP LENGTH = 4D
(D=BAR DIAMETER IN INCHES)

THE ABOVE IS TO BE USED IF NO GEOTECHNICAL RECOMMENDATIONS ARE AVAILABLE

REINFORCING STEEL BAR SIZES AND SPACING

NOT TO SCALE

CITY OF TOMBALL
ENGINEERING & PLANNING DEPARTMENT

PAVEMENT REPAIR

APPROVED BY COT:

ENGINEERING & PLANNING DEPARTMENT
EFFECTIVE JULY 1, 2010

SHEET 001 OF 001 | DWG NO: COT STR-13

CAD FILE PATH:

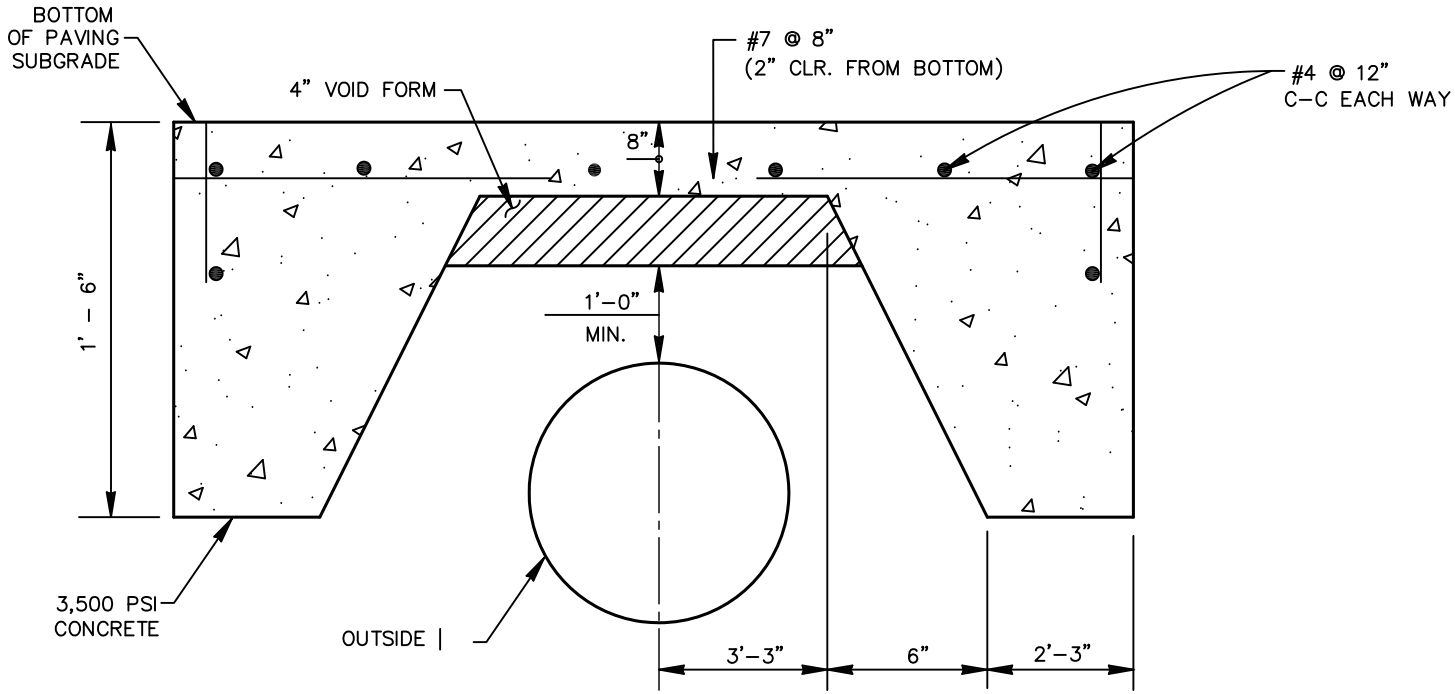

PROTECTIVE SLAB DETAIL

ZERO LOAD TRANSFER CONCRETE SLAB

NOT TO SCALE

CITY OF TOMBALL
ENGINEERING & PLANNING DEPARTMENT

ZERO LOAD TRANSFER CONCRETE SLAB & PROTECTIVE SLAB DETAIL

APPROVED BY COT:

ENGINEERING & PLANNING DEPARTMENT
EFFECTIVE JULY 1, 2010

SHEET 001 OF 001 | DWG NO: COT STR–14

CAD FILE PATH:

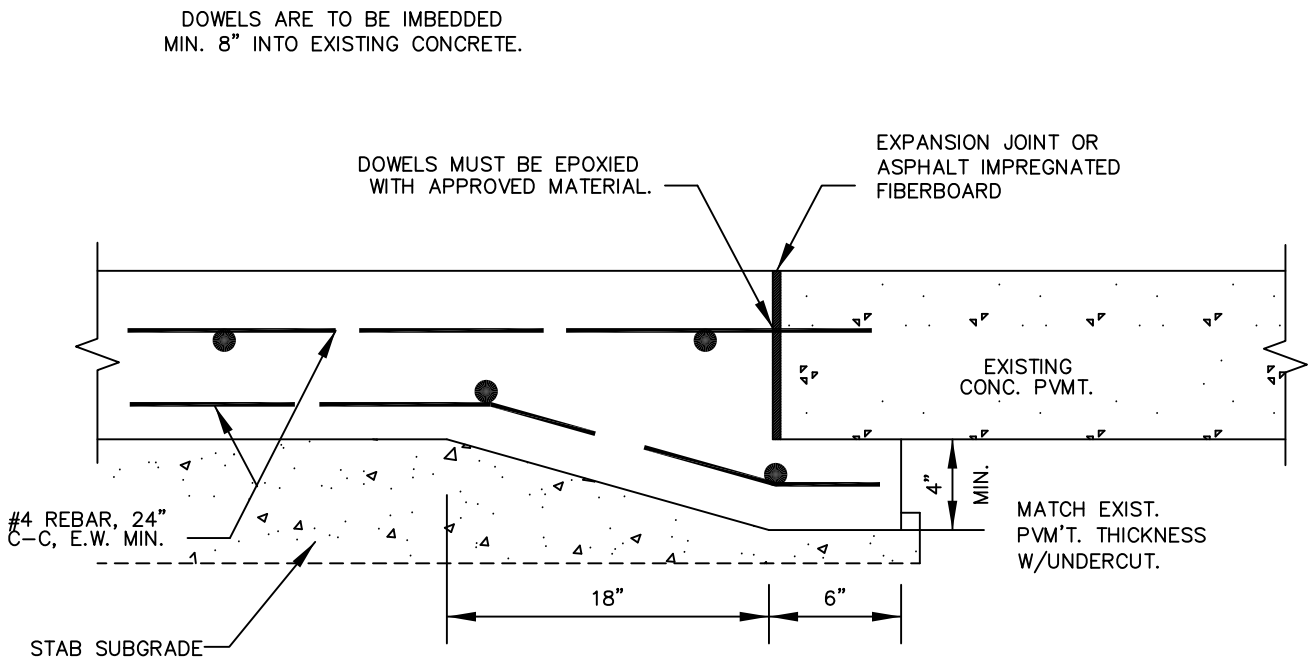

UNDERCUT DETAIL WITH HEADER

NOT TO SCALE

CITY OF TOMBALL
ENGINEERING & PLANNING DEPARTMENT

UNDERCUT DETAIL
WITH HEADER
DETAILS

APPROVED BY COT:

ENGINEERING & PLANNING DEPARTMENT
EFFECTIVE JULY 1, 2010

SHEET 001 OF 001 | DWG NO: COT STR–15

CAD FILE PATH:

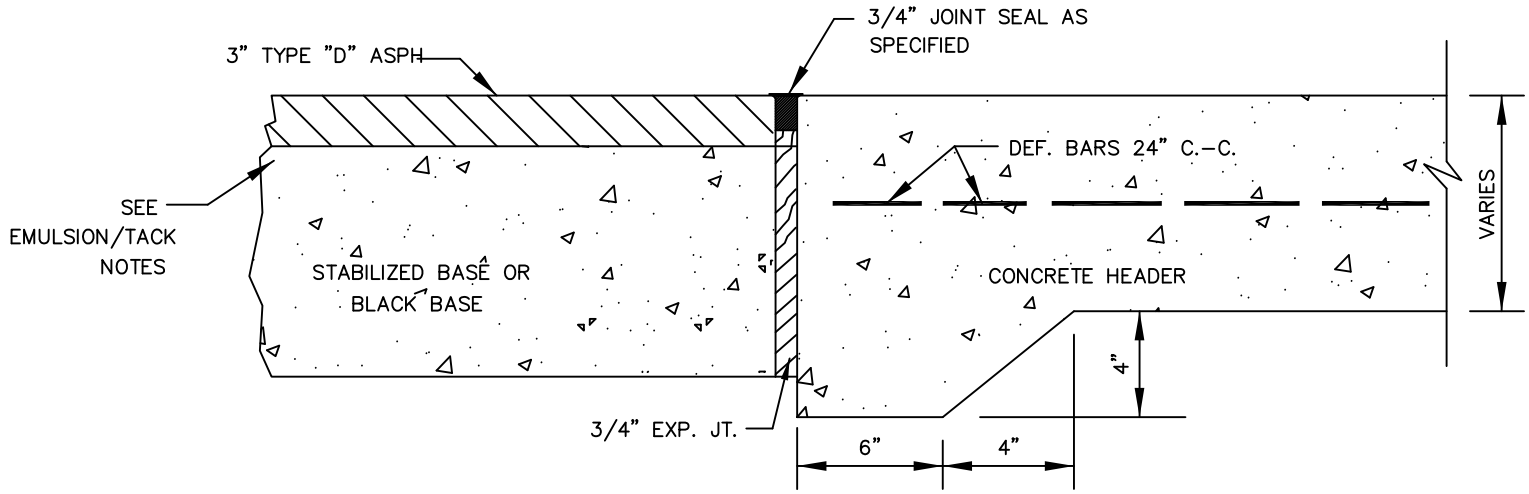

PAVING HEADER

(FOR USE IN CONNECTING CONC. PVMT. TO ASPHALT PVMT.)
(PROP. OR EXIST.)

NOT TO SCALE

CITY OF TOMBALL
ENGINEERING & PLANNING DEPARTMENT

PAVING HEADER CONSTRUCTION DETAILS

APPROVED BY COT:

ENGINEERING & PLANNING DEPARTMENT
EFFECTIVE JULY 1, 2010

SHEET 001 OF 001 | DWG NO: COT STR-16

CAD FILE PATH:

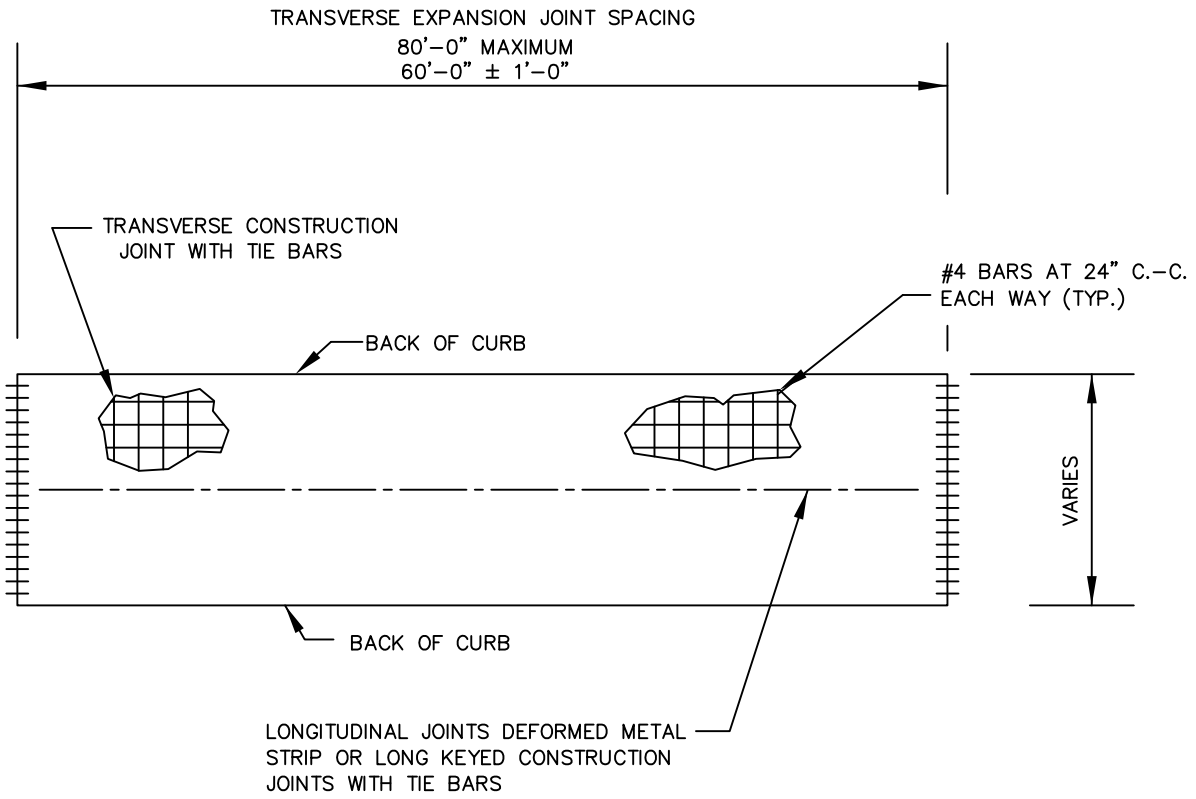

PAVING PANEL FOR 6" & 7" PAVEMENT

NOT TO SCALE

CITY OF TOMBALL
ENGINEERING & PLANNING DEPARTMENT

PAVING PANEL FOR 6" TO 7" CONCRETE PAVEMENT CONSTRUCTION

APPROVED BY COT:

ENGINEERING & PLANNING DEPARTMENT
EFFECTIVE JULY 1, 2010

SHEET 001 OF 001 | DWG NO: COT STR–17

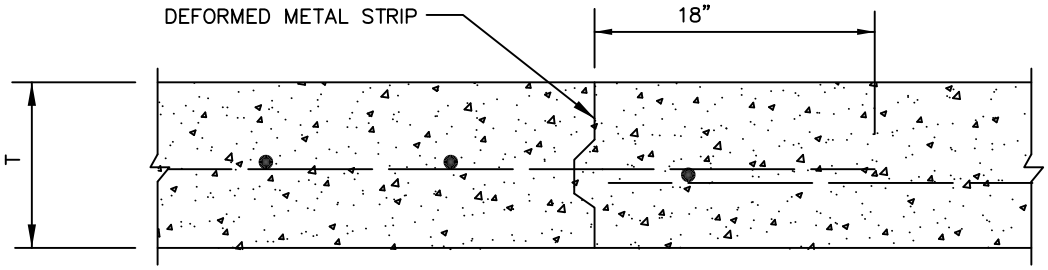

THE LOCATION OF CONSTRUCTION JOINTS AND DEFORMED METAL STRIPS MAY BE VARIED, WITH THE APPROVAL OF THE CITY ENGINEER.

DEFORMED METAL STRIP

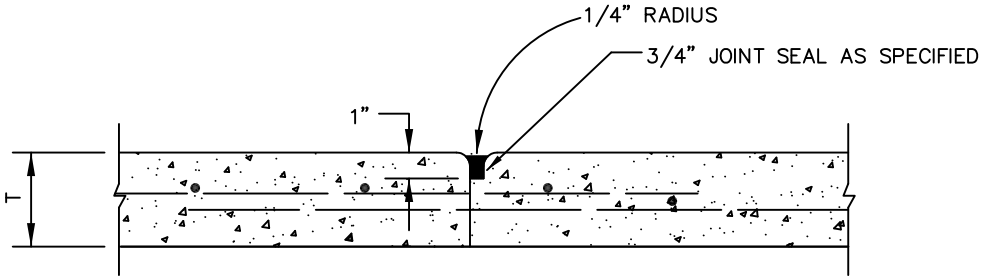

CONSTRUCTION JOINT PAVEMENT REPAIR

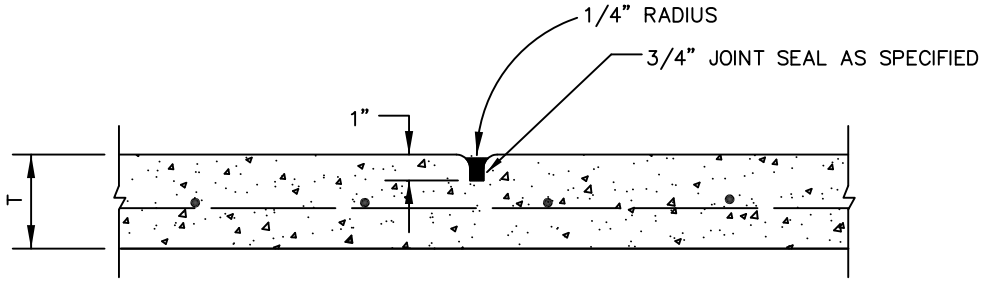

CONTRACTION JOINT

NOT TO SCALE

CITY OF TOMBALL
ENGINEERING & PLANNING DEPARTMENT

CONSTRUCTION JOINT DETAILS

APPROVED BY COT:

ENGINEERING & PLANNING DEPARTMENT
EFFECTIVE JULY 1, 2010

SHEET 001 OF 001 | DWG NO: COT STR-18

CAD FILE PATH:

CAD FILE PATH:

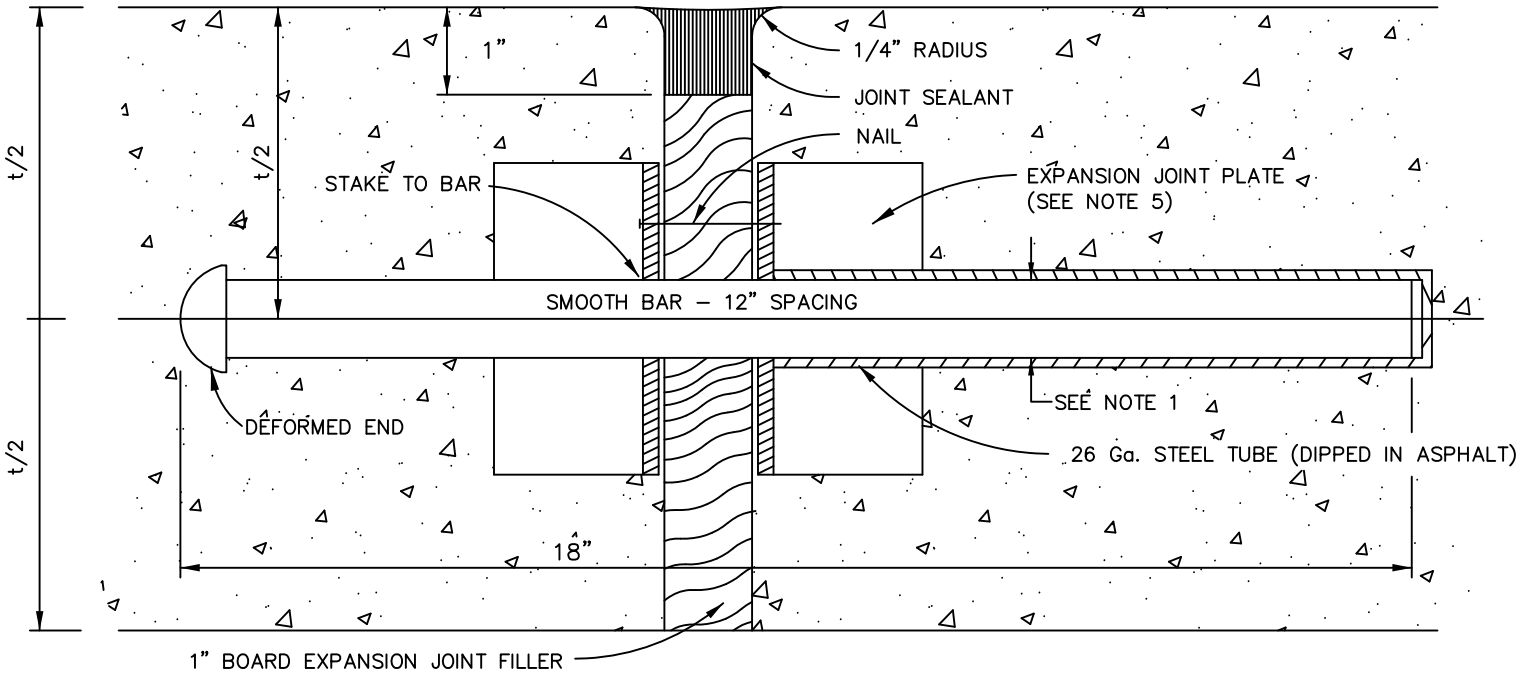

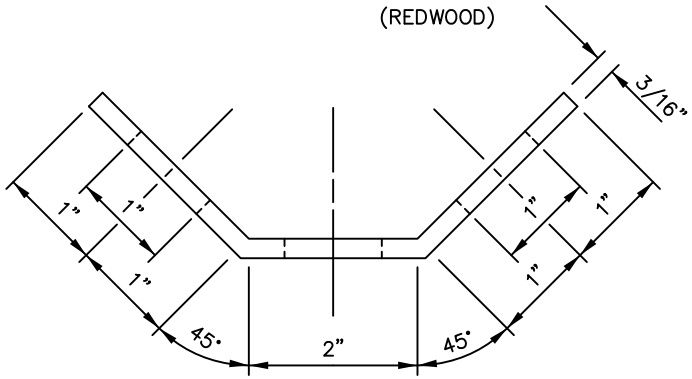

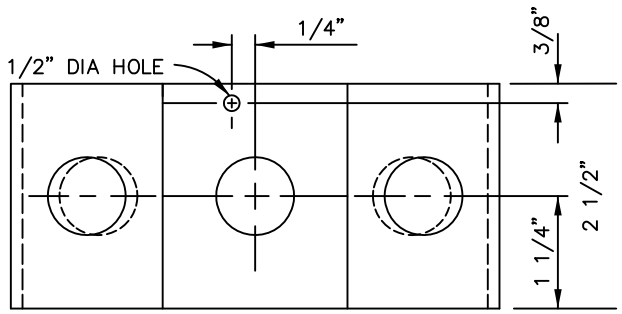

NOTE:

1. DOWELS FOR PAVEMENT EXPANSION JOINTS SHALL BE 3/4" DIA. FOR 6" TO LESS THAN 7"" PAVEMENT THICKNESS, 1" FOR 7" TO LESS THAN 9" PAVEMENT THICKNESS AND 1–1/4" DIA. FOR 9" OR GREATER PAVEMENT THICKNESS.
2. EXPANSION JOINT SHALL BE PLACED AT THE END OF EACH CURB RETURN AND AT MAXIMUM 80' SPACING (SEE PLANS).
3. ALL JOINT SEAL MATERIAL SHALL BE ASPHALT RUBBER IN ACCORDANCE WITH ASTM DESIGNATION D3405.
4. IF DEFORMED METAL STRIPS ARE ALLOWED, THEY SHALL BE STAKED IN PLACE WITH #3 BARS.
5. PRE–MANUFACTURED JOINT PLATE.

NOT TO SCALE

CITY OF TOMBALL
ENGINEERING & PLANNING DEPARTMENT

DOWEL TYPE EXPANSION JOINT CONSTRUCTION DETAILS

APPROVED BY COT:

ENGINEERING & PLANNING DEPARTMENT
EFFECTIVE JULY 1, 2010

SHEET 001 OF 001 | DWG NO: COT STR–19

CAD FILE PATH:

9–A SIGNALIZED INTERSECTION

1. ON APPROACH–BEGINNING WITH STOP LINE, INSTALL 40' OF PLASTIC MARKER, SKIP 25' MORE OR LESS, DEPENDING ON PLASTIC MARKER ADJUSTMENT FOR DISTANCE, AND BEGIN NORMAL LANE LINES.
2. ON EXIT–BEGINNING WITH CROSSWALK, INSTALL 20' OF PLASTIC MARKER, SKIP 25' MORE OR LESS, DEPENDING ON PLASTIC MARKER ADJUSTMENT FOR DISTANCE, AND BEGIN NORMAL LANE LINES.

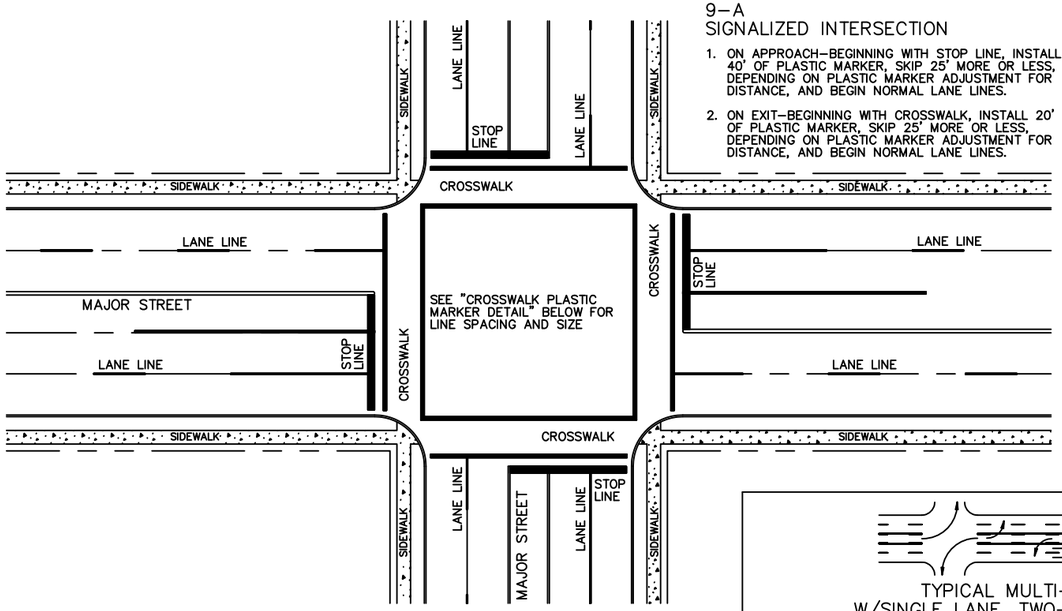

9–B NON–SIGNALIZED INTERSECTION

1. INSTALL NORMAL LANE LINE PLASTIC MARKERS BEGINNING AT THE END OF THE END OF CURB RETURN. ADJUST FOR DISTANCE WITHIN THE 25' SPACING
2. INSTALL STOP LINES & CROSSWALKS ACROSS INTERMEDIATE STREETS ONLY.

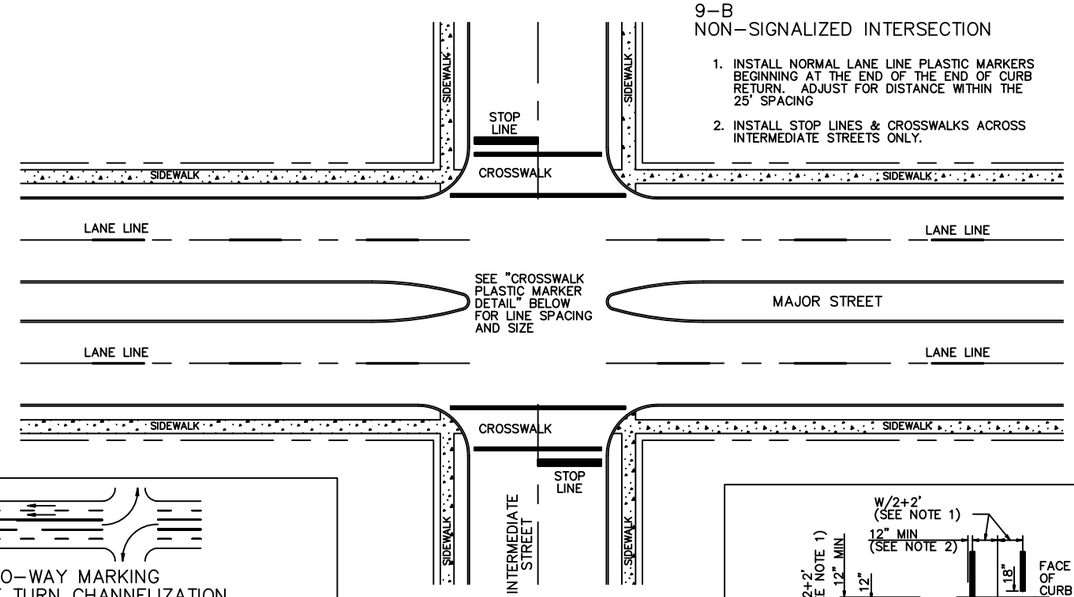

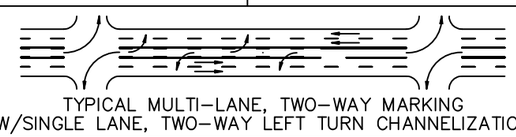

TYPICAL MULTI–LANE, TWO–WAY MARKING
W/SINGLE LANE, TWO–WAY LEFT TURN CHANNELIZATION

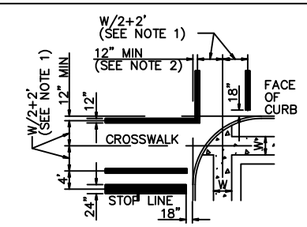

CROSSWALK PLASTIC MARKER DETAIL

RAISED PAVEMENT MARKER AND PLACEMENT DETAIL

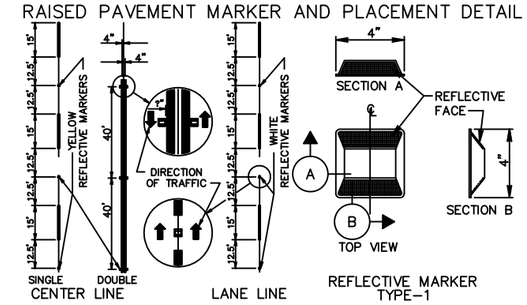

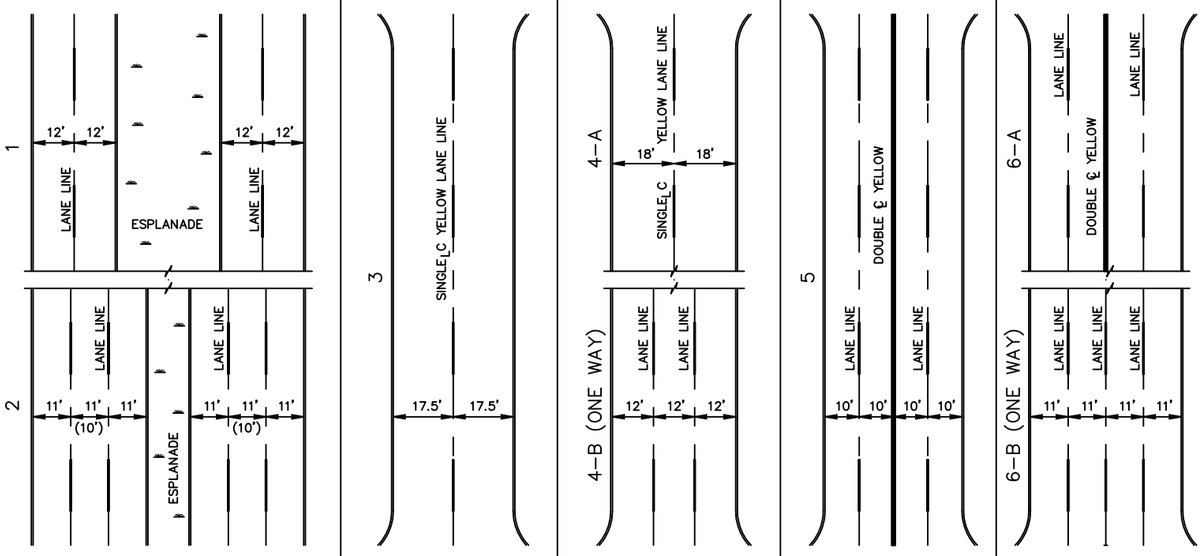

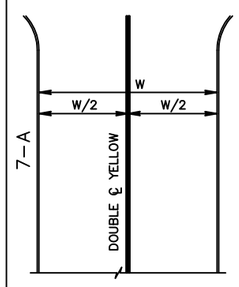

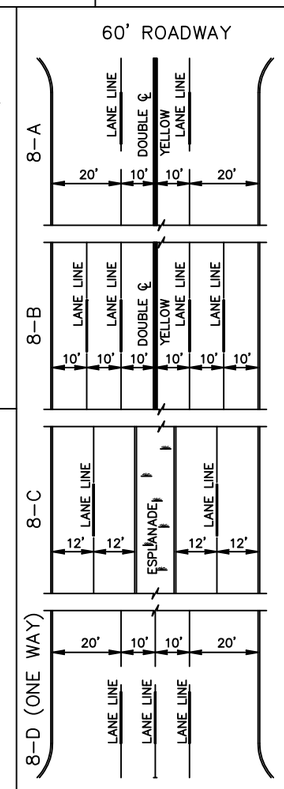

GENERAL NOTES

1. MINIMUM CROSSWALK WIDTH, 8' C–C.
2. CROSSWALKS SHALL BE 12" WIDTH APPLIED AS INDICATED IN "CROSSWALK PLASTIC MARKER DETAIL". STOP LINES SHALL BE 24" WIDE OR 2–12" WIDE STRIPES.
3. LANE LINES, SINGLE & DOUBLE >'S SHALL BE 4" WIDE REFLECTORIZED PLASTIC MARKINGS.
4. ALL PLASTIC MARKERS SHALL BE WHITE UNLESS OTHERWISE NOTED.
5. ROADWAY WIDTHS OF 27' OR LESS SHALL HAVE NO LONGITUDINAL MARKINGS.
6. ALL TRAVERSE MARKINGS SHALL END 18" FROM FACE OF CURB.
7. FOR SKEW INTERSECTIONS AND STREET WIDTHS NOT SHOWN, SEE DEPARTMENT OF TRAFFIC AND TRANSPORTATION.
8. ALL DIMENSIONS SHOWN TO CENTER OF PLASTIC MARKINGS, UNLESS OTHERWISE NOTED.

CITY OF TOMBALL
ENGINEERING & PLANNING DEPARTMENT

PAVEMENT MARKING DETAILS

APPROVED BY COT:

ENGINEERING & PLANNING DEPARTMENT
EFFECTIVE JULY 1, 2010

SHEET 001 OF 001 | DWG NO: COT STR–20

CAD FILE PATH:

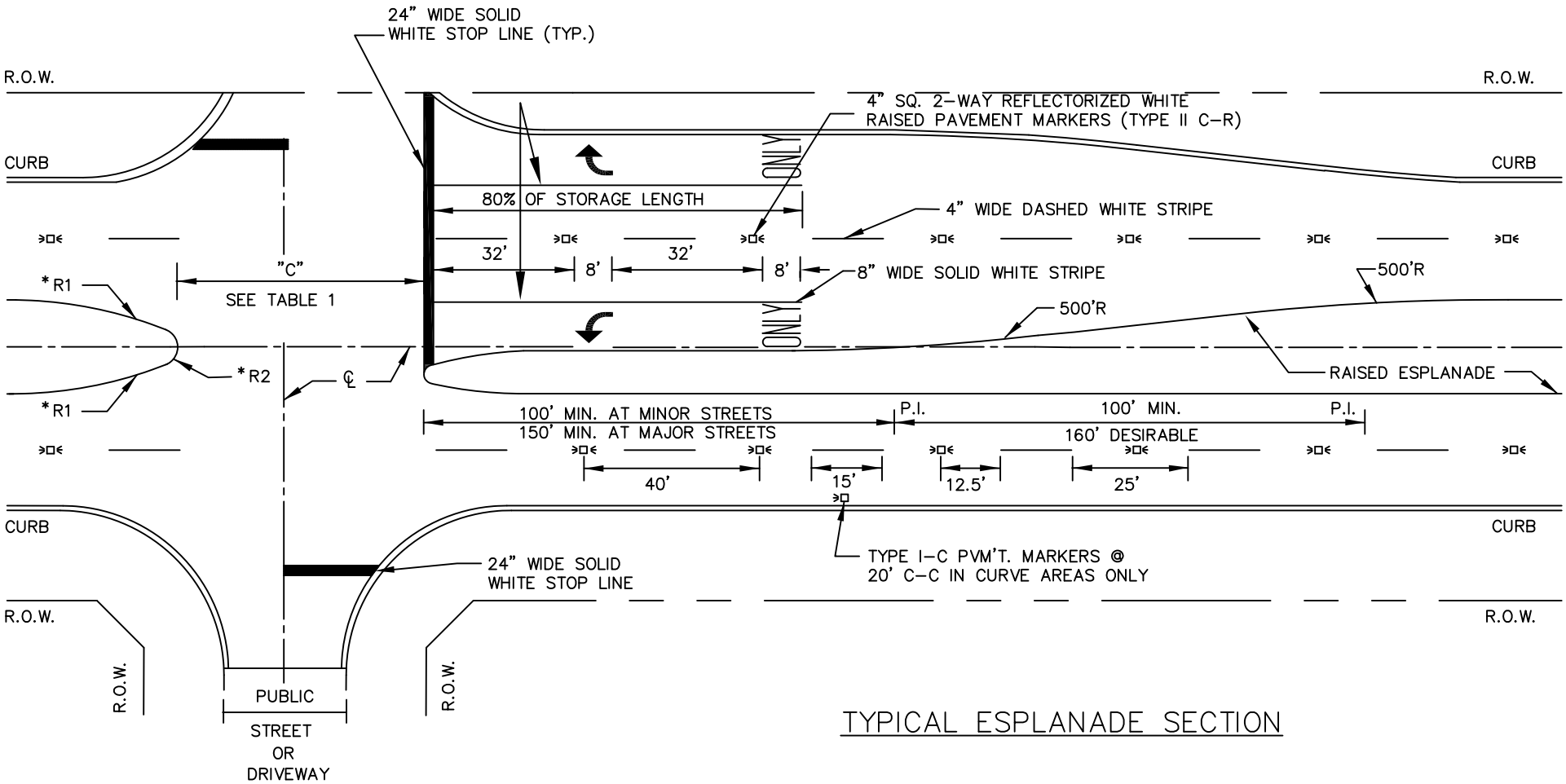

TYPICAL ESPLANADE SECTION

NOTES:

(1) IF CROSSWALK REQUIRED SEE TYPICAL CROSSWALK PLACEMENT DETAIL.

(2) NOT ALL ESPLANADE SECTIONS ARE 4-WAY STOP CONTROLLED. AS SUCH, NOT ALL MARKINGS MAY APPLY.

(3) LEFT TURN STORAGE BAYS SHALL BE A MIN. OF 100' AT MINOR STREETS AND A MIN. OF 150' AT MAJOR STREETS.

(4) REPEAT ARROWS AT APPROX. 1000' INTERVALS WITH TWO-WAY LEFT TURN SECTION.

NOT TO SCALE

CITY OF TOMBALL
ENGINEERING & PLANNING DEPARTMENT

TYPICAL INTERSECTION WITH ESPLANADE PAVEMENT MARKING PLAN

APPROVED BY COT:

ENGINEERING & PLANNING DEPARTMENT
EFFECTIVE JULY 1, 2010

SHEET 001 OF 001 | DWG NO: COT STR-21

CAD FILE PATH:

NOTES:

(1) IF CROSSWALK REQUIRED SEE TYPICAL CROSSWALK PLACEMENT DETAIL.
(2) LEFT TURN STORAGE BAYS SHALL BE A MIN. OF 100' AT MINOR STREETS AND A MIN. OF 150' AT MAJOR STREETS.
(3) REPEAT ARROWS AT APPROX. 1000' INTERVALS WITH TWO-WAY LEFT TURN SECTION.

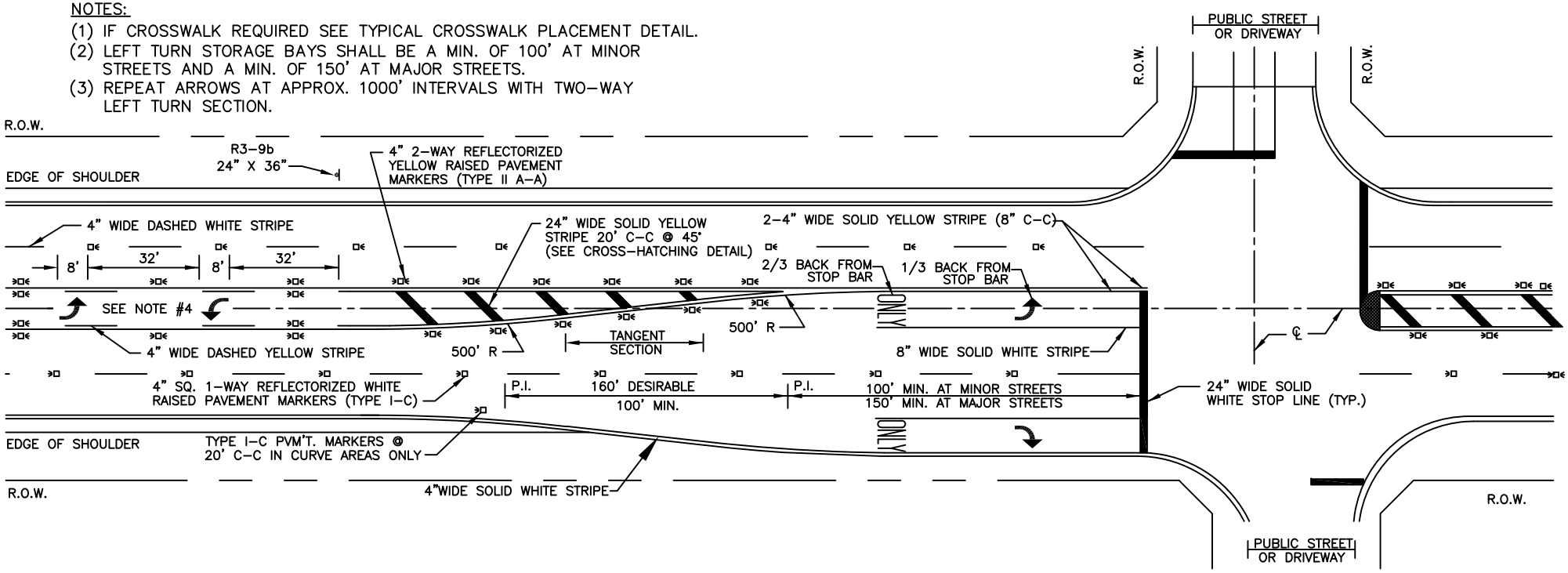

TYPICAL TWO-WAY LEFT TURN SECTION

PAVEMENT MARKER LEGEND

SYMBOL	DESCRIPTION
□	4" X 4" REFLECTORIZED RAISED PAVEMENT MARKER
□⋞	INDICATES DIRECTION OF TRAFFIC FLOW

NOT TO SCALE

CITY OF TOMBALL
ENGINEERING & PLANNING DEPARTMENT

TYPICAL TWO-WAY LEFT-TURN INTERSECTION

APPROVED BY COT:

ENGINEERING & PLANNING DEPARTMENT
EFFECTIVE JULY 1, 2010

SHEET 001 OF 001 | DWG NO: COT STR-22

CAD FILE PATH:

NOTE:

FOR SPEEDS 45 MPH OR MORE L=0.62 WS (L=WS)
FOR SPEEDS LESS THAN 45 MPH $L=^2WS/155$ (L^2=WS /60)
S=POSTED, 85TH-PERCENTILE, OR STATUTORY SPEED IN MPH
W= OFFSET DISTANCE IN FEET

MAXIMUM LENGTH OF: L= 100 FT IN URBAN AREAS
L= 200 FT IN RURAL AREAS

LENGTH "L" SHOULD BE EXTENDED AS REQUIRED BY SIGHT DISTANCE CONDITIONS

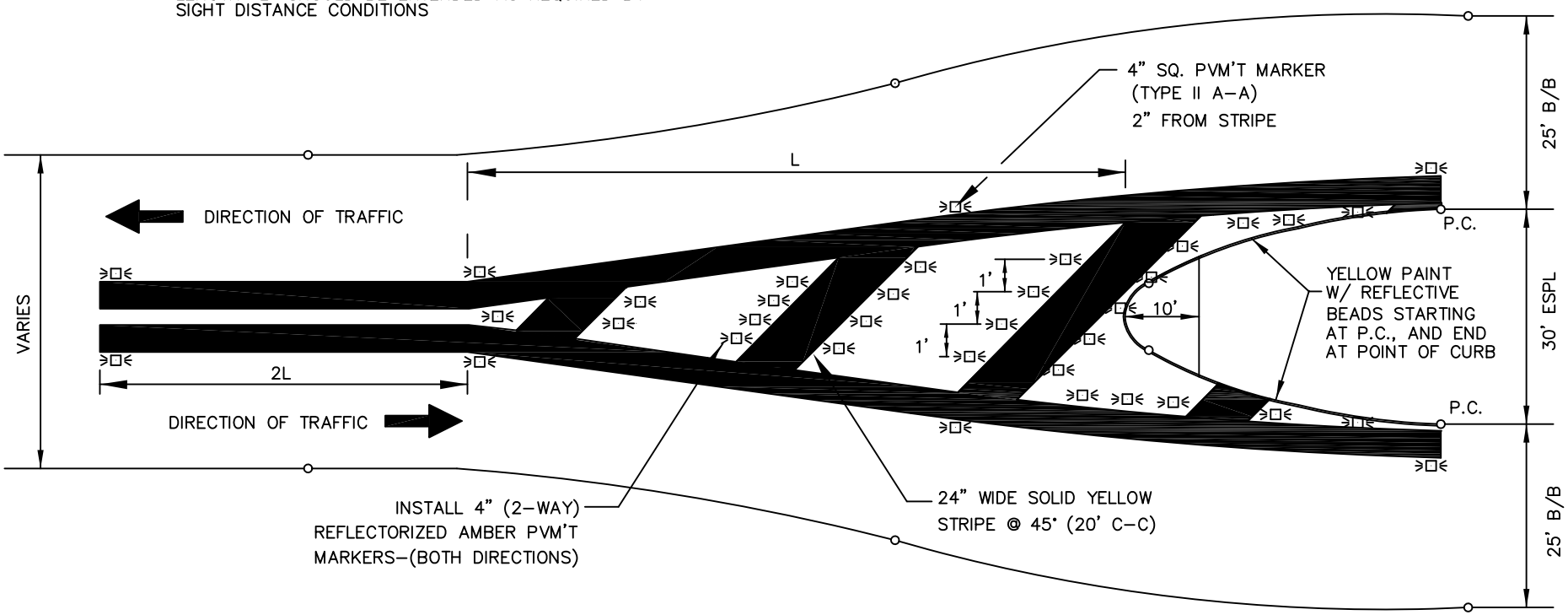

NOT TO SCALE

PVM'T MARKER PLACEMENT DETAIL FOR UNDIVIDED STREET TO ESPLANADE TRANSITION SECTION

CITY OF TOMBALL
ENGINEERING & PLANNING DEPARTMENT

PVM'T MARKER PLACEMENT FOR UNDIVIDED STREET TO ESPLANADE TRANSITION

APPROVED BY COT:

ENGINEERING & PLANNING DEPARTMENT
EFFECTIVE JULY 1, 2010

SHEET 001 OF 001 | DWG NO: COT STR-23

RADIUS DIMENSIONS

ESPLANADE	*R1	*R2
<8'	N/A	W/2
8'–38'	90'	W/5
>38'	N/A	15'

DETAIL "D"

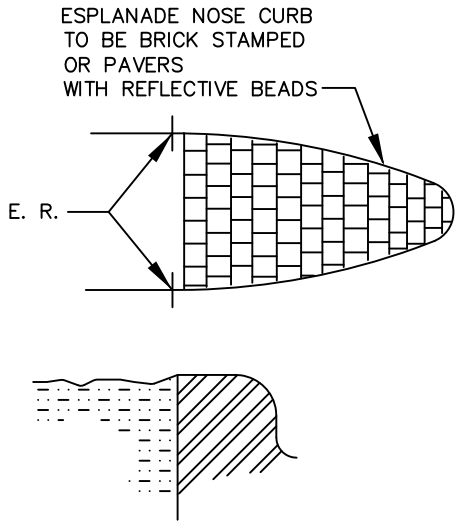

TYPICAL CURB SECTION

PAINT FROM THE BACK OF
CURB TO THE GUTTER LINE

NOT TO SCALE

CITY OF TOMBALL
ENGINEERING & PLANNING DEPARTMENT

PAVEMENT MARKING FOR ESPLANADE & ESPLANADE RADIUS DIMENSIONS TABLE

APPROVED BY COT:

ENGINEERING & PLANNING DEPARTMENT
EFFECTIVE JULY 1, 2010

SHEET 001 OF 001 | DWG NO: COT STR–24

CAD FILE PATH:

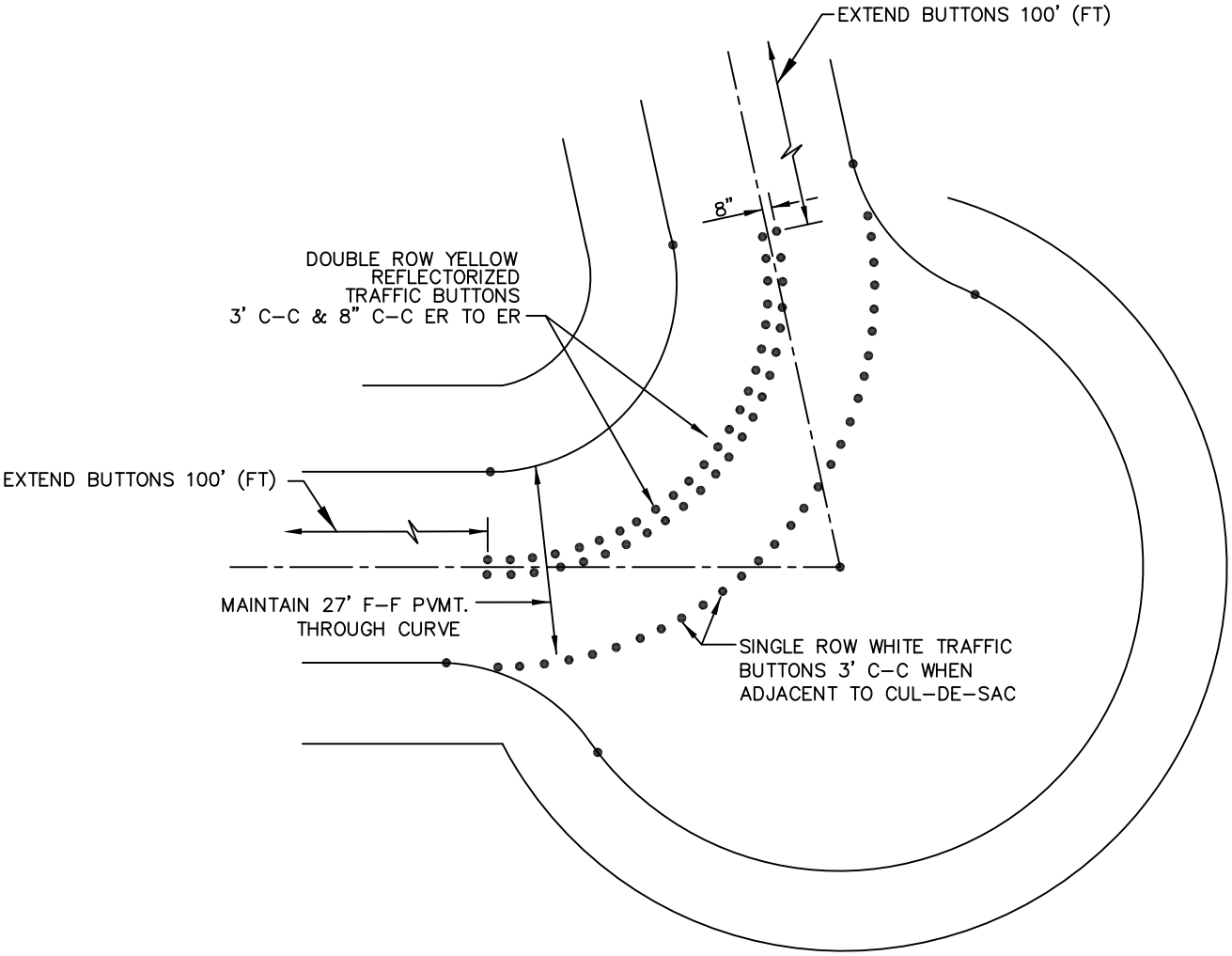

TYPICAL BUTTON DETAIL FOR CURVES ≥ 60°

NOT TO SCALE

CITY OF TOMBALL
ENGINEERING & PLANNING DEPARTMENT

TYPICAL BUTTON PLACEMENT FOR CURVES ≥ 60°

APPROVED BY COT:

ENGINEERING & PLANNING DEPARTMENT
EFFECTIVE JULY 1, 2010

SHEET 001 OF 001 | DWG NO: COT STR-25

CAD FILE PATH:

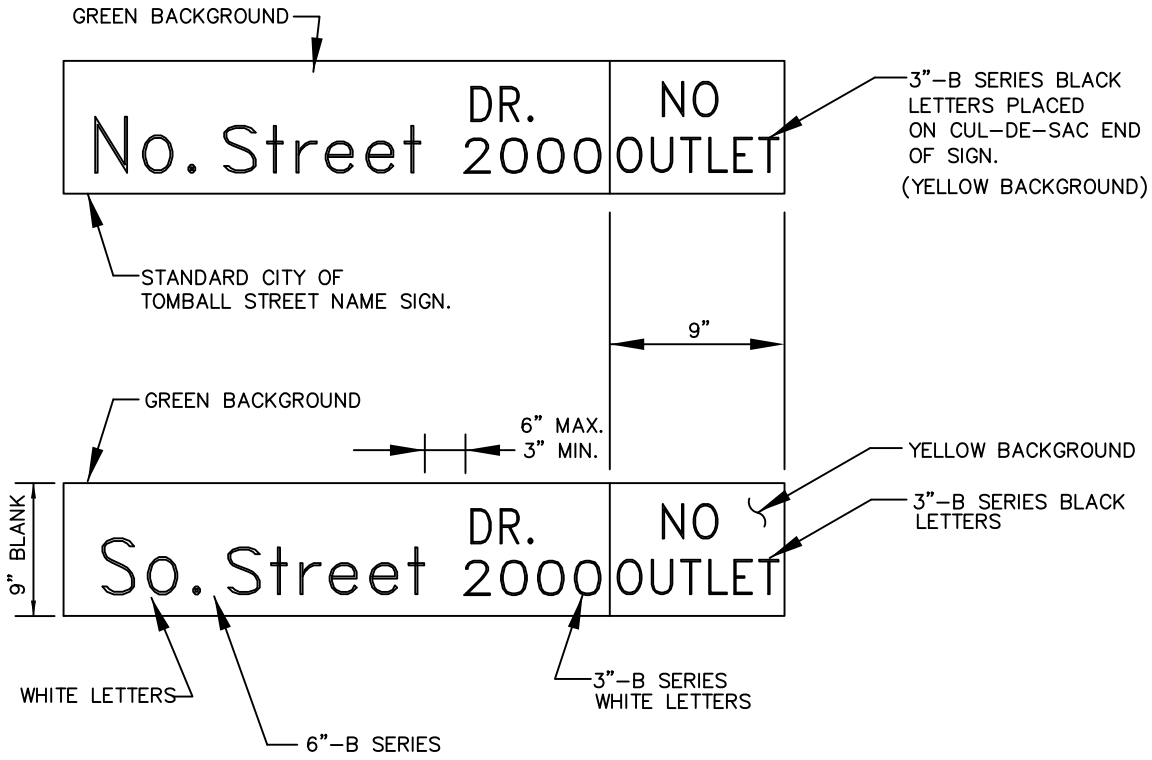

DETAIL OF STANDARD STREET NAME SIGN

NOTE:

EXTRUDED ALUMINUM STREET SIGN BLANKS WITH GREEN ENGINEER GRADE SHEETING.

6" X 18"
6" X 24"
6" X 30"
BASED UPON STREET NAME AND REQUIRED LETTERING

12' X 2 LB/FT GALVANIZED U-CHANNEL POSTS.

NOT TO SCALE

CITY OF TOMBALL
ENGINEERING & PLANNING DEPARTMENT

STANDARD STREET NAME SIGN CONSTRUCTION DETAILS

APPROVED BY COT:

ENGINEERING & PLANNING DEPARTMENT
EFFECTIVE JULY 1, 2010

SHEET 001 OF 001 | DWG NO: COT STR-26

CAD FILE PATH:

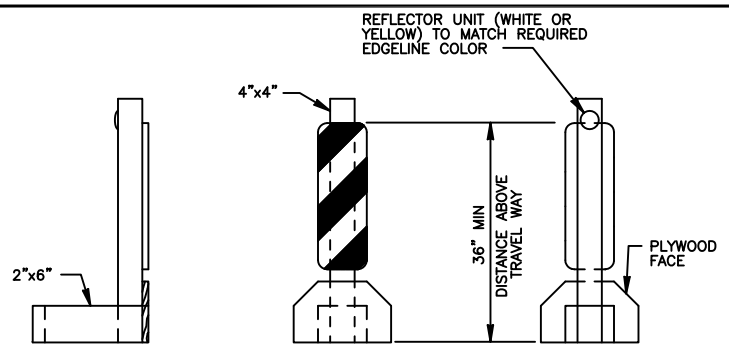

PLYWOOD FACE TO BE PAINTED CONSTRUCTION ORANGE UPRIGHT TO BE PAINTED WHITE

TYPICAL PORTABLE VERTICAL PANEL OR DELINEATOR

OTHER SIMILAR SUPPORTS MAY BE USED WHEN APPROVED OR DIRECTED BY THE CITY

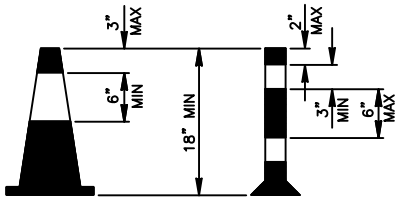

CONES

TRAFFIC CONES AND TUBULAR MARKERS SHALL BE A MINIMUM OF 18" INCHES IN HEIGHT WITH A BROADENED BASE AND MAY BE MADE OF VARIOUS MATERIALS TO WITHSTAND IMPACT WITHOUT DAMAGE TO THEMSELVES OR TO VEHICLES. LARGER SIZES SHOULD BE USED ON FREEWAYS AND OTHER ROADWAYS WHERE SPEED ARE RELATIVELY HIGH OR WHERE EVER MORE CONSPICUOUS GUIDANCE IS NEEDED. ORANGE SHALL BE THE PREDOMINANT COLOR ON CONES AND TUBULAR MARKERS. THEY SHOULD BE KEPT CLEAN AND BRIGHT FOR MAXIMUM TARGET VALUE. FOR NIGHTTIME USE THEY SHALL BE REFLEC- TORIZED OR EQUIPPED WITH LIGHTING DEVICES FOR MAXIMUM VISIBILITY. REFLECTORIZED MATERIAL SHALL HAVE A SMOOTH, SEALED OUTER SURFACE WHICH WILL DISPLAY THE SAME APPROXIMATE COLOR DAY AND NIGHT.

REFLECTORIZATION OF TUBULAR MARKERS SHALL BE A MINIMUM OF TWO THREE-INCH BANDS PLACED A MAXIMUM OF 2" FROM THE TOP WITH A MAXIMUM OF 6" BETWEEN THE BANDS. REFLECTORIZATION OF CONES SHALL BE PROVIDED BY A MINIMUM 6" BAND PLACED A MAXIMUM OF 3" FROM THE TOP.

CONES OR TUBULAR MARKERS ARE GENERALLY ONLY SUITABLE FOR TEMPORARY USAGE (UP TO 8 HOURS) WITH OTHER CHANNELIZATION DEVICES SUCH AS VERTICAL PANELS OR BARRICADES PREFERRED FOR LONGER TERM USAGE. CARE SHOULD BE TAKEN TO INSURE THAT THEY REMAIN IN THEIR PROPER LOCATION AND IN AN UPRIGHT POSITION.

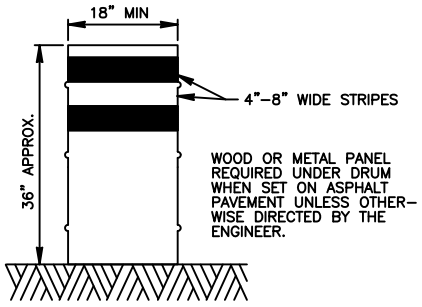

DRUMS

DRUMS, SET ON END, AND USED FOR TRAFFIC WARNING OR CHANNELIZATION SHALL BE APPROXIMATELY 36" IN HEIGHT AND A MINIMUM OF 18" IN DIAMETER. THE CONTRACTOR, AT HIS OPTION, MAY USE DRUMS MADE FROM STEEL BARRELS OR BLACK POLYETHYLENE PLASTIC DRUM LINERS WEIGHING APPROXIMATELY EIGHT POUNDS EACH. THE MARKINGS ON DRUMS SHALL BE HORIZONTAL, CIRCUMFERENTIAL, REFLECTORIZED ORANGE AND REFLECTORIZED WHITE SRIPES, 4 TO 8 INCHES WIDE. THE FIRST REFLECTORIZED STRIPE SHOULD START WITHIN TWO (2) INCHES OF THE TOP OF THE DRUM. THERE SHALL BE AT LEAST TWO ORANGE AND TWO WHITE STRIPS ON EACH DRUM. IF THERE ARE NON- REFLECTORIZED SPACES BETWEEN THE HORIZONTAL ORANGE AND WHITE STRIPS, THEY SHALL BE NO MORE THAN 2 INCHES WIDE. METAL DRUMS SHALL BE PAINTED BLACK OR ORANGE BEFORE REFLECTORIZED STRIPS ARE ADDED. ALL DRUMS ON PROJECT WILL BE THE SAME COLOR. WHEN DRUMS ARE PLACED IN THE ROADWAY, APPROPIATE WARNING SIGNS SHOULD BE USED. DURING HOURS OF DARKNESS, A FLASHING WARNING LIGHT SHOULD BE PLACED ON DRUMS USED SINGLY AS A WARNING DEVICE. STEADY BURN ELECTRIC LIGHTS OR DELINEATORS SHOULD BE PLACED ON DRUMS USED IN SERIES FOR TRAFFIC CHANNELIZATION. DRUMS SHALL BE WEIGHTED WITH SAND TO THE EXTENT INDICATED IN THE PLANS.

CWI-8 CHEVRON SIGNS, CWI-6A ARROW SIGNS OR VP-I VERTICAL PANELS MOUNTED ABOVE DRUMS MAY BE USED AS SUPPLEMENTS TO DRUM DELINEATION.

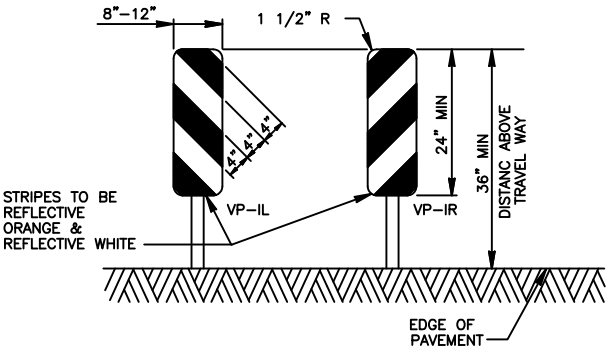

VERTICAL PANELS (VP)

VERTICAL PANELS ARE NORMALLY USED AS CHANNELIZING DEVICES TO INDICATE TANGENT OR NEARLY TANGENT ROADWAY ALIGNMENT WHERE GOOD TARGET VALUE OF A DEVICE IS NEEDED IN DAYTIME AS WELL AS THE NIGHTTIME. IN ADDITION, VERTICAL PANELS SHOULD BE USED AT THE EDGE OF SHOULDER DROP-OFFS AND OTHER SUCH AREAS AS LANE TRANSITIONS WHERE POSITIVE DAY AND NIGHT DELINEATION MAY BE REQUIRED. VERTICAL PANELS SHOULD BE MOUNTED BACK TO BACK IF USED AT THE EDGE OF CUTS ADJACENT TO TWO-WAY TWO LANE ROADWAYS. STRIPES SHOULD ALWAYS SLOPE DOWNWARD TOWARD THE TRAVELED WAY.

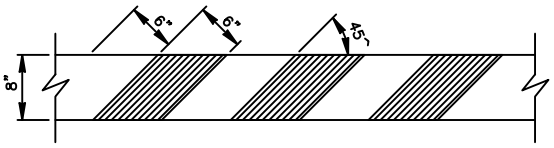

STRIPING FOR BARRICADE

FOR ALL TYPES OF BARRICADES WITH RAILS LESS THAN 3'-0" LONG, STRIPES 4" WIDE SHALL BE USED. IDENTIFICATION MARKINGS MAY BE SHOWN ONLY ON BACK SIDE OF BAR-RICADE RAILS.

STRIPING SHOULD COVER THE FULL WIDTH OF THE RAIL. STRIPING OF RAILS, PANELS, ETC., SHOULD SLOPE DOWNWARD AT AN ANGLE OF 45^ DEGREES IN DIRECTIONS TRAFFIC IS TO PASS.

WHERE A BARRICADE EXTENDS ENTIRELY ACROSS A ROADWAY, IT IS DESIRABLE THAT THE STRIPES SLOPE DOWNWARD IN THE DIRECTION TOWARD WHICH TRAFFIC MUST TURN IN DETOURING. WHEN BOTH RIGHT AND LEFT TURNS ARE PROVIDED FOR, THE CHEVRON STRIPING MAT SLOPE DOWNWARD IN BOTH DIRECTIONS FROM THE CENTER OF THE BARRICADE.

NOT TO SCALE

CITY OF TOMBALL
ENGINEERING & PLANNING DEPARTMENT

BARRICADE STANDARD SHEET 1 OF 3

APPROVED BY COT:

ENGINEERING & PLANNING DEPARTMENT
EFFECTIVE JULY 1, 2010

SHEET 1 OF 3 | DWG NO: COT STR-27

CAD FILE PATH:

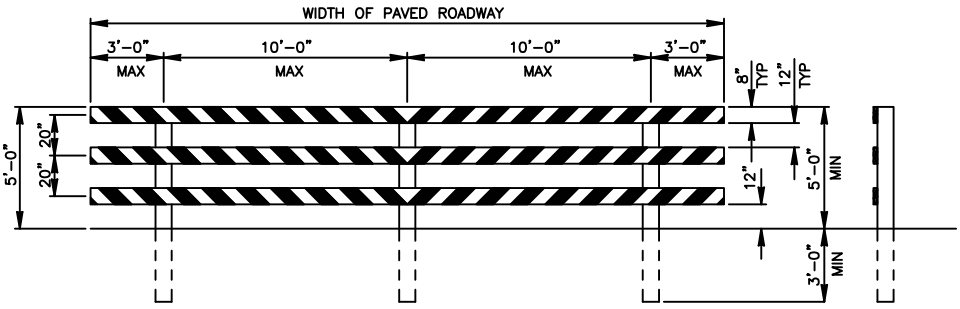

TYPE III BARRICADE FOR END OF ROAD

FOR TYPE III BARRACADE FOR END OF ROAD, THE THREE (3) RAILS SHALL BE REFLECTIVE RED AND RELFLECTIVE WHITE SRIPES ON SIDE FACING TRAFFIC.

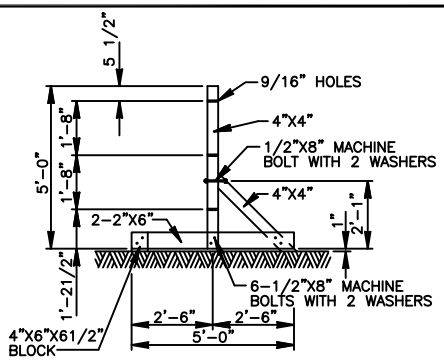

STAND FOR TYPE III BARRICADE

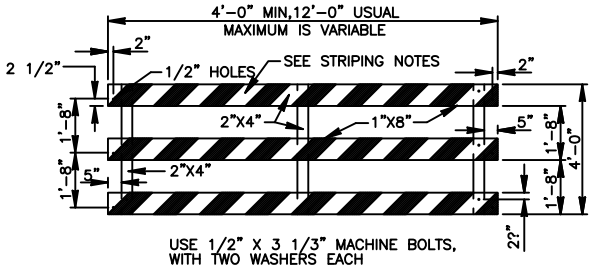

PANEL FOR TYPE III BARRICADE

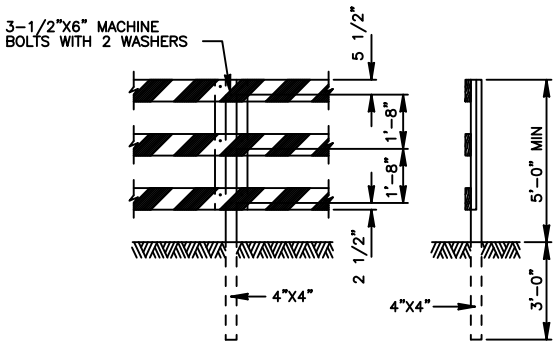

POST FOR TYPE III BARRICADE

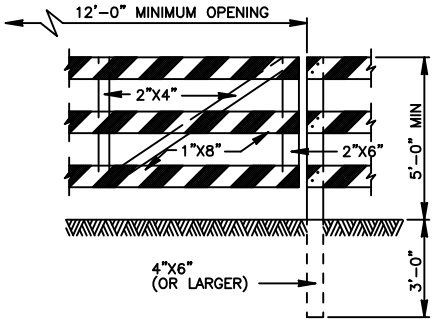

GATE FOR TYPE III BARRICADE

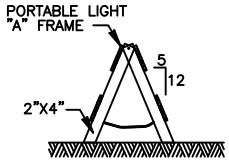

"A" FRAME

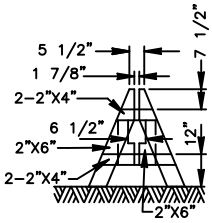

DEMOUNTABLE

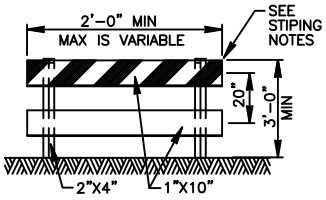

TYPE I

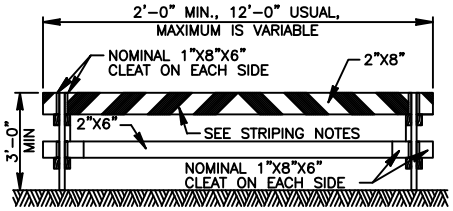

TYPE I

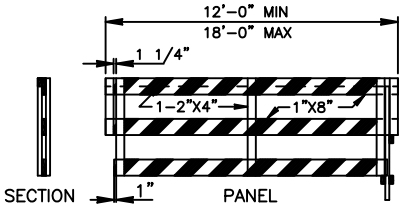

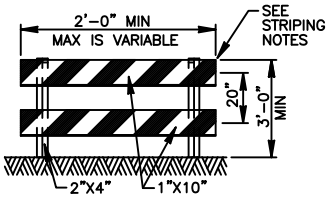

TYPE II

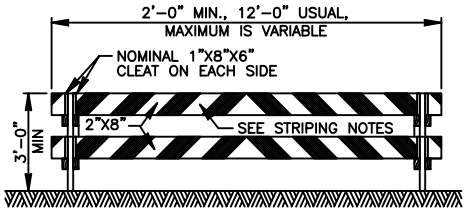

TYPE II

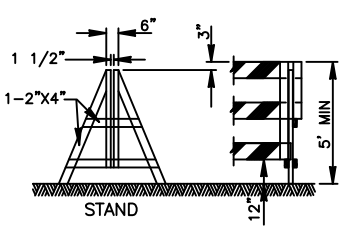

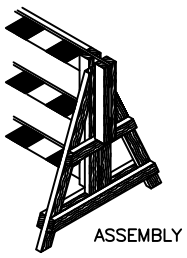

DEMOUNTABLE TYPE III BARRACADE

CITY OF TOMBALL
ENGINEERING & PLANNING DEPARTMENT

BARRICADE STANDARD SHEET 2 OF 3

APPROVED BY COT:

ENGINEERING & PLANNING DEPARTMENT
EFFECTIVE JULY 1, 2010

SHEET 2 OF 3 | DWG NO: COT STR-27

CAD FILE PATH:

BARRICADE NOTES

THE MOST RECENT EDITION OF THE TEXAS MANUAL ON UNIFORM TRAFFIC CONTROL DEVICES, AND IT'S REVISIONS, SHALL GOVERN THE CONSTRUCTION AND USE OF ALL ITEMS HEREIN DESCRIBED.

CHANNELIZATION DEVICES OTHER THAN BARRICADES SHOULD NORMALLY BE USED FOR CHANNELIZATION PURPOSES.

BARRICADES SHOULD NORMALLY BE PLACED PERPENDICULAR TO THE TRAFFIC FLOW. OTHER CHANNELIZING DEVICES, SUCH AS DRUMS, VERTICAL PANELS OR PORTABLE BARRIERS, SHOULD BE USED WHERE NEEDED TO SEPARATE TRAFFIC FROM THE WORK AREA. IN ALL CASES, THE BARRICADES SHOULD BE SO LOCATED AS TO MOST ADVANTAGEOUSLY WARN AND DIRECT TRAFFIC.

BARRICADES MAY BE DESIGNED AND CONSTRUCTED FROM WOOD OR ANY OTHER SUITABLE MATERIAL IN A MANNER APPROVED BY THE CITY. THE CONSTRUCTION DETAILS SHOWN HEREON ARE TYPICAL AND ARE SUGGESTED DETAILS FOR WOOD SUPPORT SYSTEMS FOR BARRICADES. THE DETAILS OF RAIL WIDTH AND STRIPING, NUMBER AND SPACING OF RAILS, MINIMUM LENGTH AND HEIGHT (ABOVE PAVEMENT) OF RAILS MUST BE ADHERED TO WHEN ALTERNATE DESIGNS ARE USED.

BARRICADES ARE TO BE CONSTRUTED IN A FIRST-CLASS WORKMANSHIP MANNER OF CLEAN SOUND MATERIAL. ALL SURFACES ABOVE GROUND, WHICH ARE NOT STRIPPED, SHALL BE WHITE EXCEPT THE UNPAINTED GALVANIZED METAL OR ALUMINUM COMPONENTS MAY BE USED. COMPONENTS MADE OF LUMBER SHALL BE PAINTED WITH A MINIMUM OF TWO COATS OF AN APPROVED BRAND OF WHITE PAINT TO SECURE THROUGH COVERAGE AND A UNIFORM WHITE COLOR.

THE REFLECTORIZED WHITE AND REFLECTORIZED ORANGE (REFLECTORIZED RED) STRIPES FOR BARRICADES, DRUMS AND VERTICAL PANELS SHALL BE CONSTRUCTED OF "HIGH INTESITY SHEETING AND SHALL BE MAINTAINED TO MEET THE APPEARANCE, COLOR AND REFLECTIVITY REQUIREMENTS SET BY CITY.

THE CONTRACTOR SHALL MAINTAIN EACH BARRICADE IN A CLEAN AND GOOD CONDITION.

BARRICADES SHALL BE REMOVED UPON COMPLETION OF THE WORK AND/OR THE ELIMINATION OF THE HAZARD ON ANY SECTION.

CITY OF TOMBALL
ENGINEERING & PLANNING DEPARTMENT

BARRICADE STANDARD
SHEET 3 OF 3

APPROVED BY COT:

ENGINEERING & PLANNING DEPARTMENT
EFFECTIVE JULY 1, 2010

SHEET 3 OF 3 | DWG NO: COT STR-27

CAD FILE PATH: