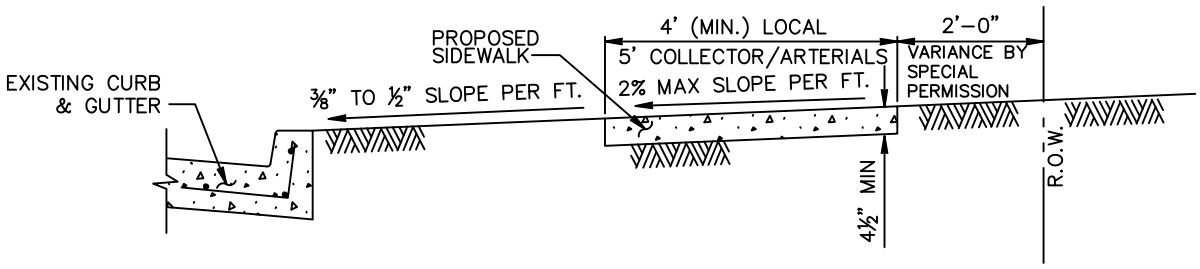

A–USE WHERE SIDEWALKS TO BE BUILT OTHER THAN DRIVEWAY

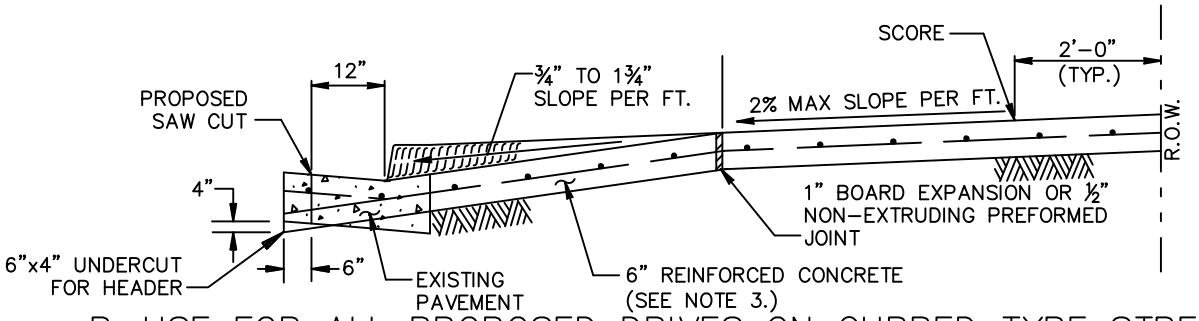

B–USE FOR ALL PROPOSED DRIVES ON CURBED TYPE STREETS

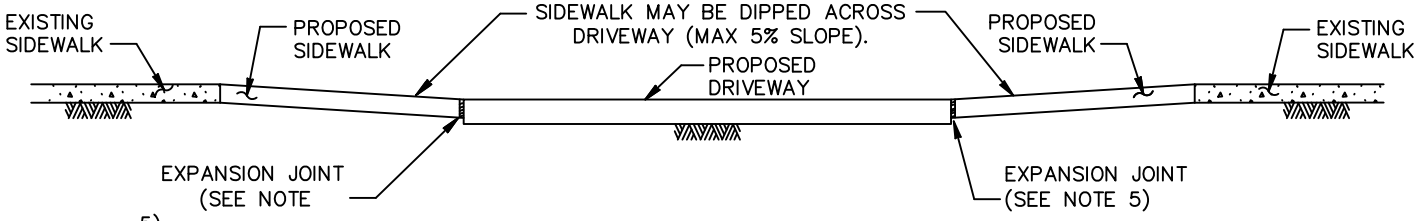

5)

C–USE WHERE PROPOSED DRIVEWAY IS TO BE BUILT WITH EXISTING SIDEWALKS, WITH EXCESSIVE GRADES

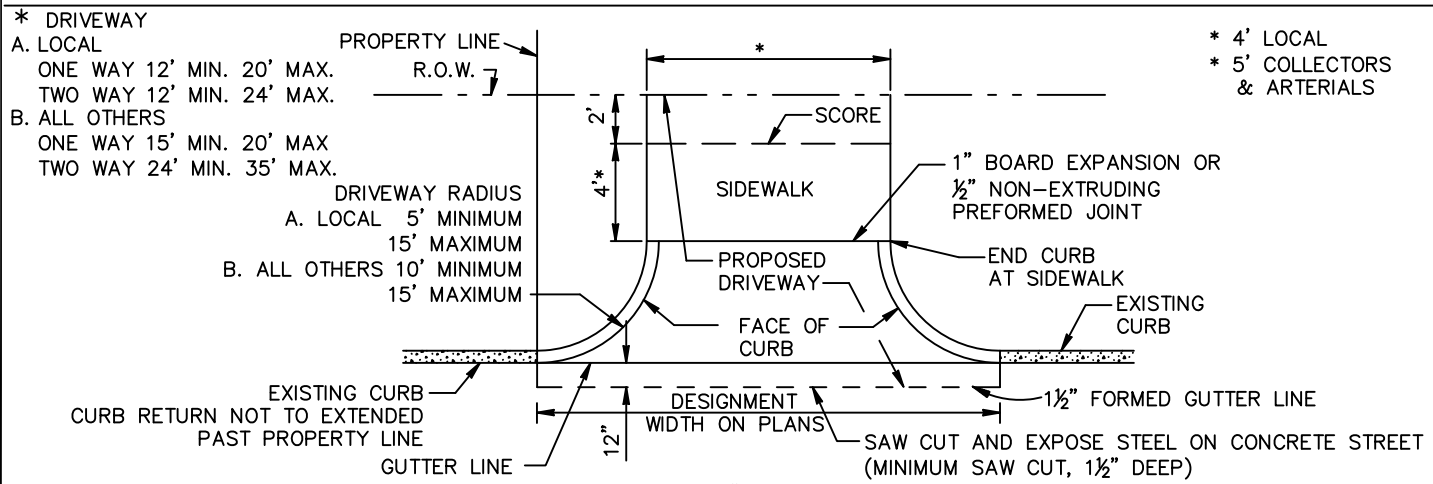

IF NO REINFORCING STEEL EXISTS USE HORIZONTAL DOWELS @ 24" O.C., UNLESS OTHERWISE SPECIFIED. HORIZONTAL DOWELS SHALL BE #4 BARS, 24" LONG, DRILLED AND EMBEDDED 8" INTO THE CENTER OF THE EXISTING SIZE WITH "PO ROC" OR EQUAL.

D–PROPOSED DRIVEWAY PLAN

NOTES:

1. SIDEWALK, DRIVEWAY, CURB AND GUTTER AND GRADE SHALL BE APPROVED BY ENGINEERING & PLANNING DIRECTOR.
2. SIDEWALKS SHALL BE CONSTRUCTED WITH PORTLAND CEMENT CONCRETE, 5.5 SACK CEMENT PER CUBIC YARD (MIN. 3000 PSI), 4 1/2" THICK, 4'–0" MINIMUM WIDTH, AND BE REINFORCED WITH # 3 @ 18" O.C.E.W.
3. DRIVEWAYS SHALL BE CONSTRUCTED WITH PORTLAND CEMENT CONCRETE, 5.5 SACK CEMENT PER CUBIC YARD (MIN. 3000 PSI), 6" THICK, FROM CURB TO PROPERTY LINE AND BE REINFORCED WITH MINIMUM # 3 @ 18" O.C.E.W. (16" MIN. LENGTH OF LAP) OR # 4 @ 24" O.C.E.W. (22" MIN. LENGTH OF LAP).
4. ONE–INCH BOARD EXPANSION OR 1/2" NON–EXTRUDING PREFORMED JOINT; AT INTERVALS OF 20 FT. (MAXIMUM) THROUGHOUT ENTIRE LENGTH OF SIDEWALKS, WHERE NEW WALK MEETS OLD WALK AND/OR NEW DRIVEWAY.
5. ONE–INCH BOARD EXPANSION OR 1/2" NON–EXTRUDING PREFORMED JOINT, BETWEEN SIDEWALK AND CURB, AROUND FIRE HYDRANTS AND UTILITY POLES.
6. NO WORK PRIOR TO OBTAINING A CITY OF TOMBALL DRIVEWAY PERMIT

NOT TO SCALE

CITY OF TOMBALL
ENGINEERING & PLANNING DEPARTMENT

SIDEWALK & DRIVEWAY CONSTRUCTION DETAILS FOR CURBED TYPE STREETS

APPROVED BY COT:

ENGINEERING & PLANNING DEPARTMENT
EFFECTIVE JULY 1, 2010

SHEET 001 OF 001 | DWG NO: COT DW–01

CAD FILE PATH:

TABLE–A

CEMENT STABILIZED SAND (C.S.S.) 1.5–SACK/C.Y.	
RESIDENTIAL	4" MINIMUM
COMMERCIAL	6" MINIMUM
INDUSTRIAL	8" MINIMUM
REINFORCED CONCRETE PAVEMENT 3,000 PSI MIN	
RESIDENTIAL	4" MINIMUM
COMMERCIAL	6" MINIMUM
INDUSTRIAL	8" MINIMUM

DRIVEWAY PAVEMENT CONSTRUCTION TABLE

NOTES:

1.) SAW CUT & BREAKOUT NO MORE THAN 72 HOURS PRIOR TO PROPOSED CONCRETE PLACEMENT. NOTIFY CITY OF TOMBALL PRIOR TO CUT.

2.) UNSTABLE SUBGRADE SHALL BE OVER EXCAVATED & REPLACED WITH CONCRETE.

3.) IT IS CONTRACTOR'S RESPONSIBILITY TO NOTIFY THE CITY OF ANY BIRD BATH PROBLEMS PRIOR TO CONSTRUCTION OF DRIVEWAY.

4.) USE 1"x2" TREATED STAKES FOR HEADER.

5.) EDGE ALL SIDES WITH EDGING TOOL AND BROOM FINISH.

6.) FOR INDUSTRIAL DRIVES, PAVEMENT SHALL HAVE A DEPTH OF 8" (IN.).

7.) EXPANSION JOINT AT PROPERTY LINE REQUIRED. 3/4" REDWOOD BOARD WITH No. 4 DOWELS MINIMUM.

8.) MAXIMUM ALLOWABLE DRIVEWAY GRADE IN PUBLIC R.O.W. IS 10%.

9.) DRIVEWAY GRADE MUST MEET A.D.A AND T.A.S. SIDEWALK SLOPE, SIDEWALKS MUST BE SCORED TO MATCH ADJACENT SIDEWALK. IF SLOPE IS CONTINUED THROUGH THE R.O.W. LINE, PROVIDE A 3/4" REDWOOD EXPANSION JOINT WITH DOWELS AT R.O.W. LINE.

10.) REFER TO GENERAL, C.S.S., ASPHALT, AND CONCRETE PAVEMENT NOTES.

NOT TO SCALE

CITY OF TOMBALL
ENGINEERING & PLANNING DEPARTMENT

DRIVEWAY PAVEMENT CONSTRUCTION TABLE & CONSTRUCTION NOTES

APPROVED BY COT:

ENGINEERING & PLANNING DEPARTMENT
EFFECTIVE JULY 1, 2010

SHEET 001 OF 001 | DWG NO: COT DW–02

CAD FILE PATH:

CAD FILE PATH:

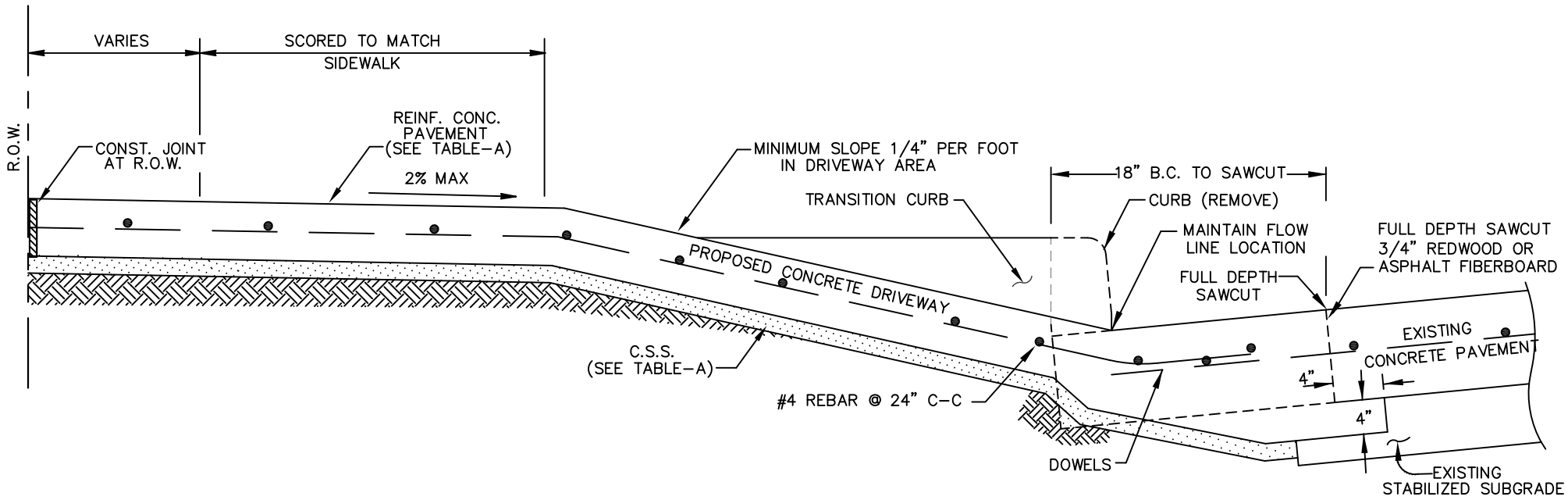

6" CONCRETE CURB DRIVEWAY

NOT TO SCALE

CITY OF TOMBALL
ENGINEERING & PLANNING DEPARTMENT

6" STANDARD CONCRETE CURB DRIVEWAY PROFILE

APPROVED BY COT:

ENGINEERING & PLANNING DEPARTMENT
EFFECTIVE JULY 1, 2010

SHEET 001 OF 001 | DWG NO: COT DW-03

CAD FILE PATH:

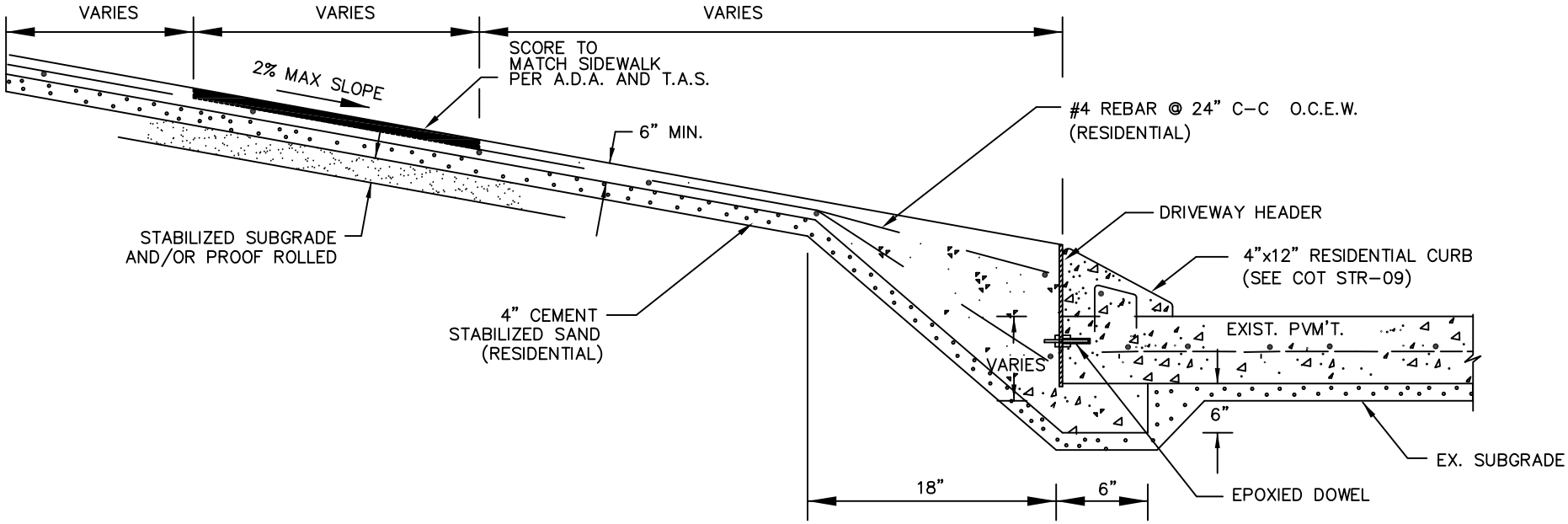

SECTION B

4"x12" CONCRETE CURB DRIVEWAY

NOT TO SCALE

CITY OF TOMBALL
ENGINEERING & PLANNING DEPARTMENT

4" X 12" CONCRETE CURB DRIVEWAY PROFILE

APPROVED BY COT:

ENGINEERING & PLANNING DEPARTMENT
EFFECTIVE JULY 1, 2010

SHEET 001 OF 001 | DWG NO: COT DW-04

CAD FILE PATH:

NOTE:
SEE COT DW-04 FOR SECTION B-B

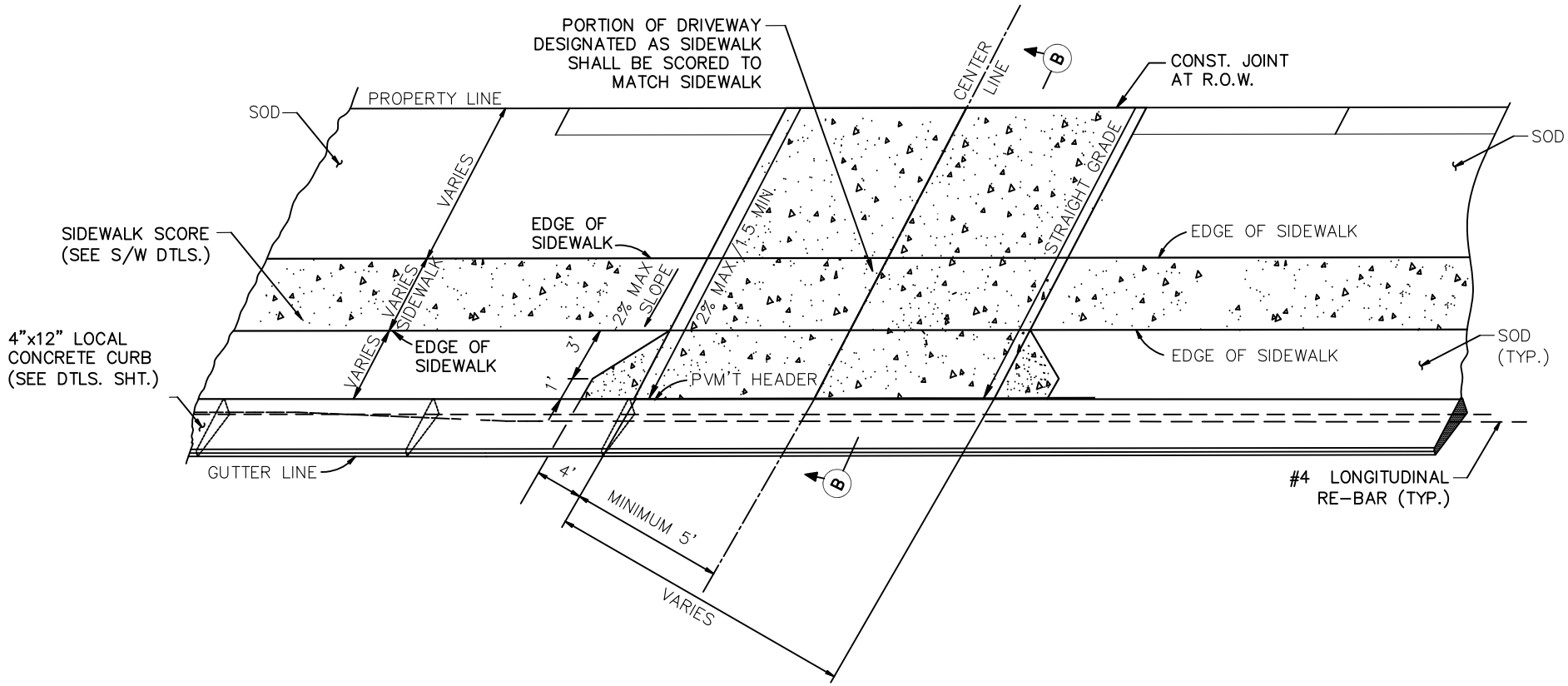

4"x12" CONCRETE CURB DRIVEWAY PLAN

NOT TO SCALE

CITY OF TOMBALL
ENGINEERING & PLANNING DEPARTMENT

4"X12" CONCRETE CURB DRIVEWAY PLAN

APPROVED BY COT:

ENGINEERING & PLANNING DEPARTMENT
EFFECTIVE JULY 1, 2010

SHEET 001 OF 001 | DWG NO: COT DW-05

THIS STANDARD APPLICABLE ON OPEN DITCH TYPE STREETS
CULVERT SIZE TO BE APPROVED BY THE CITY ENGINEER

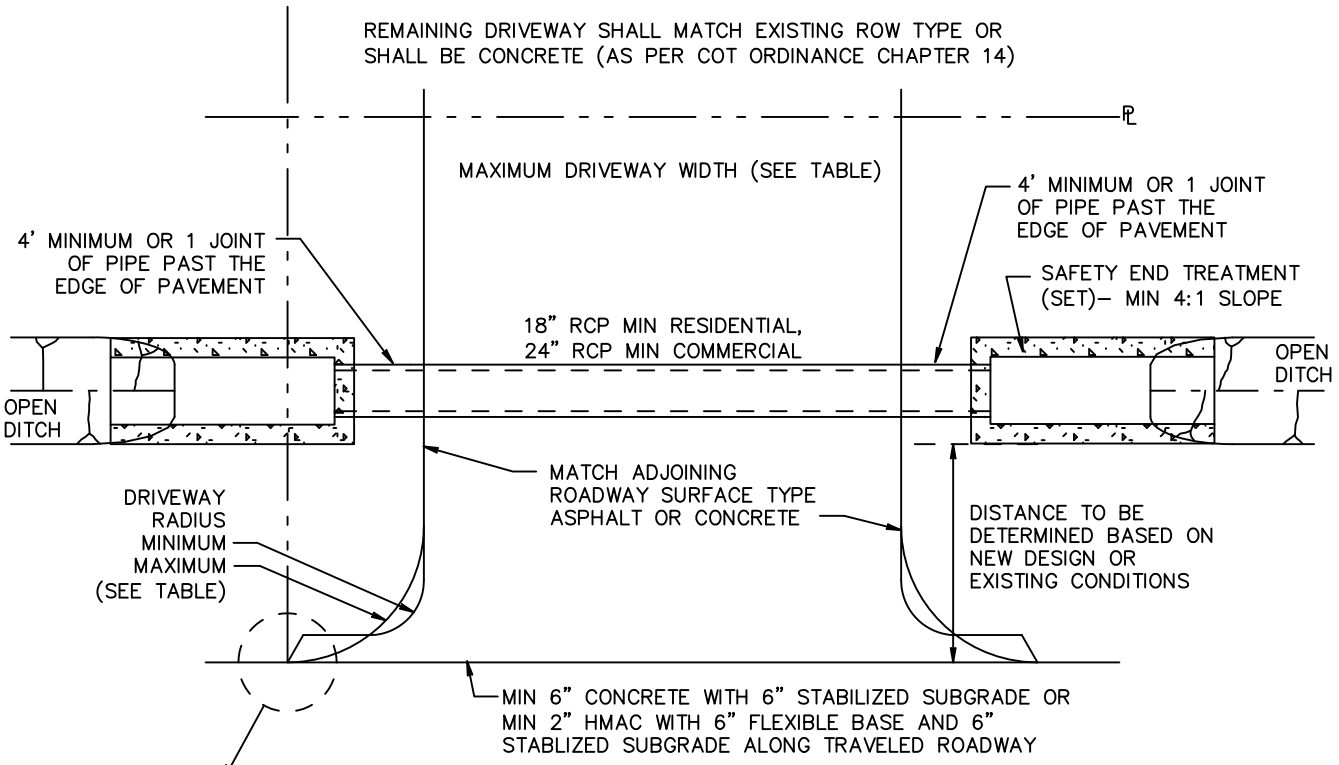

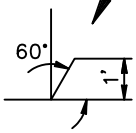

STANDARD OPEN DITCH DRIVEWAY

CITY OF TOMBALL DRIVEWAY PERMIT REQUIRED

SET
MIN 4:1 SLOPE
MIN 6:1 SLOPE
REQUIRED ON ALL CROSSINGS EXCEPT
18" RCP FOR RESIDENTIAL PROPERTY

IF NO REINFORCING STEEL EXISTS USE HORIZONTAL DOWELS @ 24" O.C., UNLESS OTHERWISE SPECIFIED. HORIZONTAL DOWELS SHALL BE #4 BARS, 24" LONG, DRILLED AND EMBEDDED 8" INTO THE CENTER OF THE EXISTING SIZE WITH "PO ROC" OR EQUAL.

"A" DRIVEWAY WIDTH	RESIDENTIAL	ALL OTHERS
ONE WAY	12' MIN, 20' MAX	15' MIN 20' MAX
TWO WAY – CITY	12' MIN 24' MAX	24' MIN 35' MAX
TWO WAY – ETJ	12' MIN, 24' MAX	24' MIN, 35' MAX
"R" DRIVEWAY RADIUS		
CITY	5' MIN – 15' MAX	10' MIN – 15' MAX
ETJ	5' MIN – 15' MAX	10' MIN – 15' MAX

RADII AND WIDTHS FOR DRIVEWAYS

NOT TO SCALE

CITY OF TOMBALL
ENGINEERING & PLANNING DEPARTMENT

DRIVEWAYS ALONG OPEN DITCH TYPE STREETS CONSTRUCTION DETAILS

APPROVED BY COT:

ENGINEERING & PLANNING DEPARTMENT
EFFECTIVE JULY 1, 2010

SHEET 001 OF 001 | DWG NO: COT DW–06

CAD FILE PATH:

CAD FILE PATH:

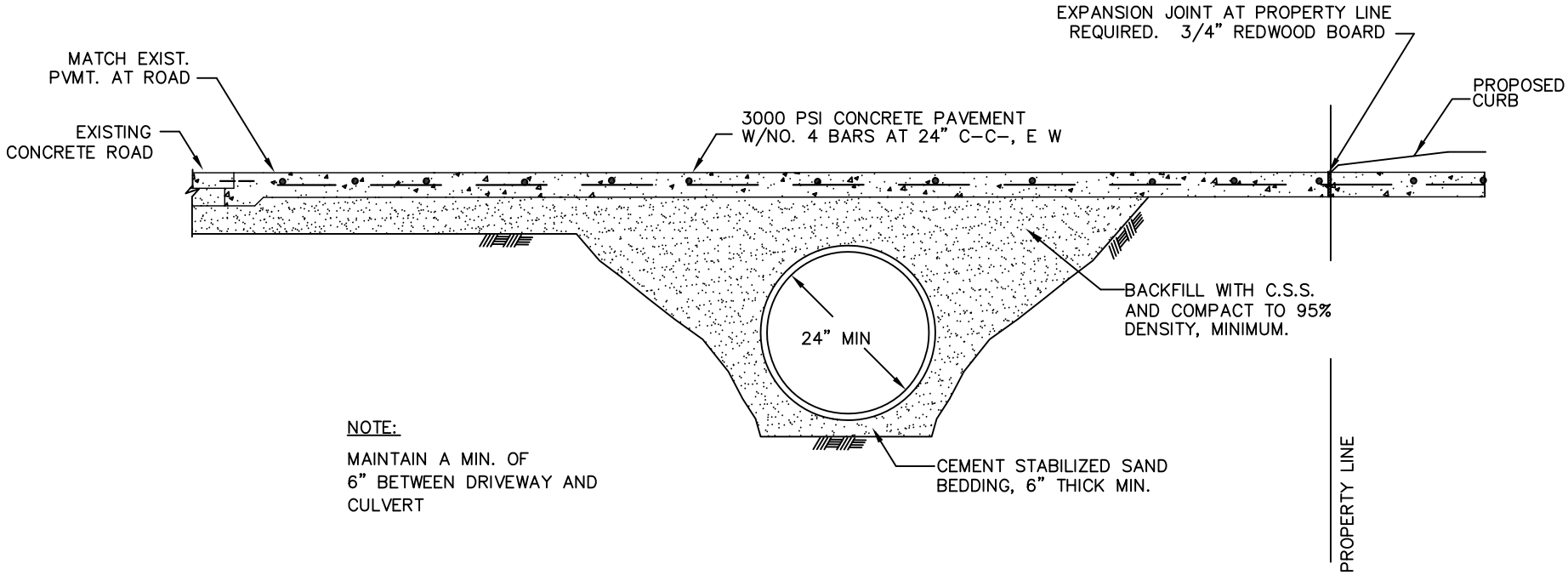

CONCRETE APRON DETAIL – DRIVEWAY PROFILE FOR CULVERT DRAINAGE

NOT TO SCALE

CITY OF TOMBALL
ENGINEERING & PLANNING DEPARTMENT

CONCRETE APRON DETAIL & DRIVEWAY PROFILE FOR CULVERT DRAINAGE

APPROVED BY COT:

ENGINEERING & PLANNING DEPARTMENT
EFFECTIVE JULY 1, 2010

SHEET 001 OF 001 | DWG NO: COT DW-07

CAD FILE PATH:

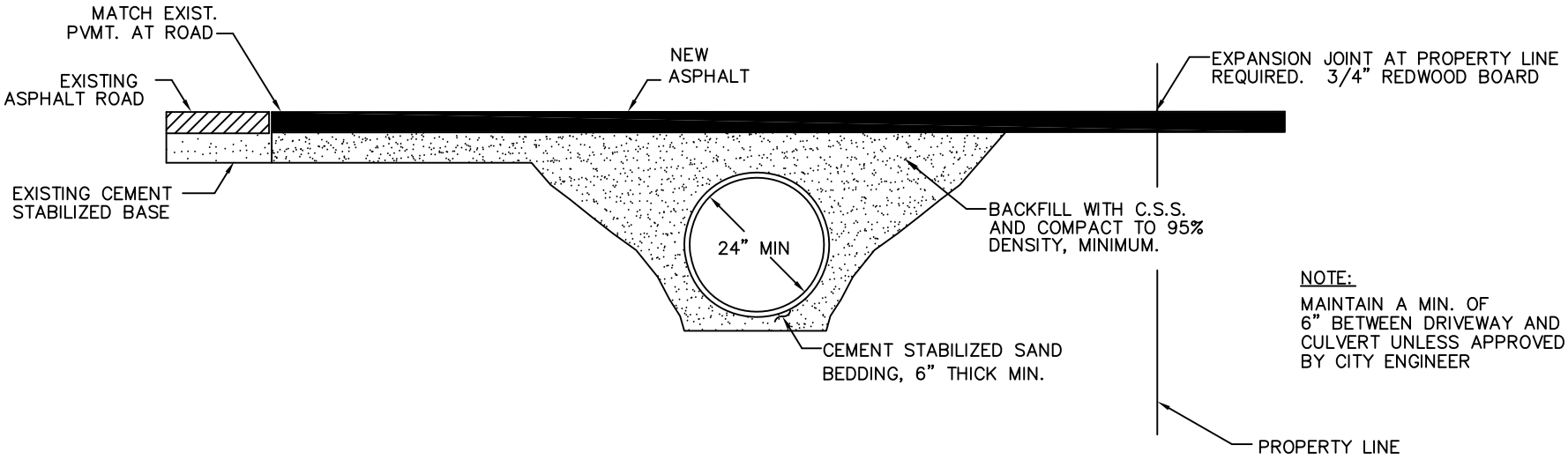

NOTE:
MAINTAIN A MIN. OF
6" BETWEEN DRIVEWAY AND
CULVERT UNLESS APPROVED
BY CITY ENGINEER

ASPHALT APRON DETAIL – DRIVEWAY PROFILE FOR CULVERT DRAINAGE

NOTE:
LESS THE 2' USE CLASS IV PIPE
2' OR GREATER USE CLASS III PIPE (MIN)
REFERENCE STORM SEWER NOTES.

NOT TO SCALE

CITY OF TOMBALL
ENGINEERING & PLANNING DEPARTMENT

ASPHALT APRON DETAIL
DRIVEWAY PROFILE
FOR CULVERT DRAINAGE

APPROVED BY COT:

ENGINEERING & PLANNING DEPARTMENT
EFFECTIVE JULY 1, 2010

SHEET 001 OF 001 | DWG NO: COT DW-08

SIGHT DISTANCES AT ENTRANCES

	D = DISTANCE ALONG MAJOR ROAD FROM DRIVEWAY TO ALLOW VEHICLE TO ENTER SAFELY. FEET [1]															
	30 MPH				40 MPH				50 MPH				60 MPH			
	2 LANE		4 OR 6 LANE		2 LANE		4 OR 6 LANE		2 LANE		4 OR 6 LANE		2 LANE		4 OR 6 LANE	
	D_L	D_R	D_L	D_R	D_L	D_R	D_L	D_R	D_L	D_R	D_L	D_R	D_L	D_R	D_L	D_R
PASSENGER CARS	350	250	220	260	530	440	360	440	740	700	620	700	950	1050	950	1050
TRUCKS	500	400	400	400	850	850	850	850	1600	1600	1600	1600	2500	2500	2500	2500

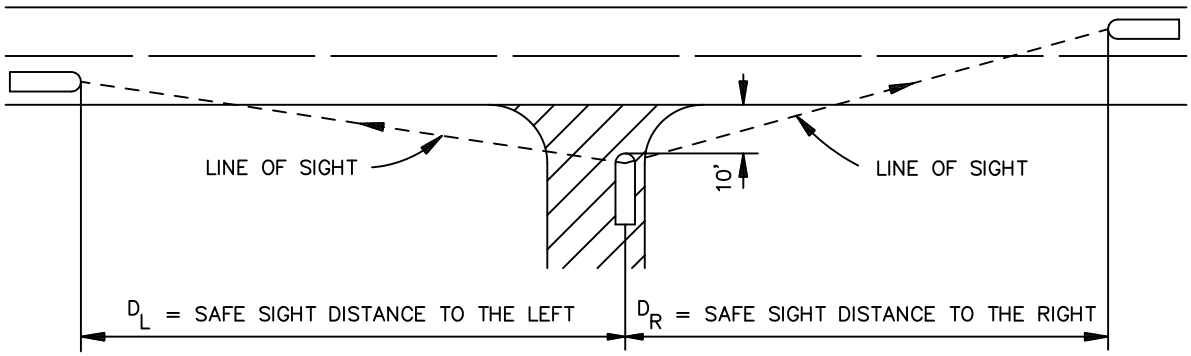

LEFT TURN SIGHT DISTANCES AT ENTRANCES

	S = DISTANCE ALONG MAJOR ROUTE VEHICLE TO SAFELY TURN LEFT ONTO DRIVEWAY. FEET [1]											
	30 MPH			40 MPH			50 MPH			60 MPH		
	2 LANE	4 LANE	6 LANE	2 LANE	4 LANE	6 LANE	2 LANE	4 LANE	6 LANE	2 LANE	4 LANE	6 LANE
PASSENGER CARS	230	250	270	380	390	420	520	550	580	700	740	780
TRUCKS	400	440	480	570	620	670	810	800	850	1000	1100	1200

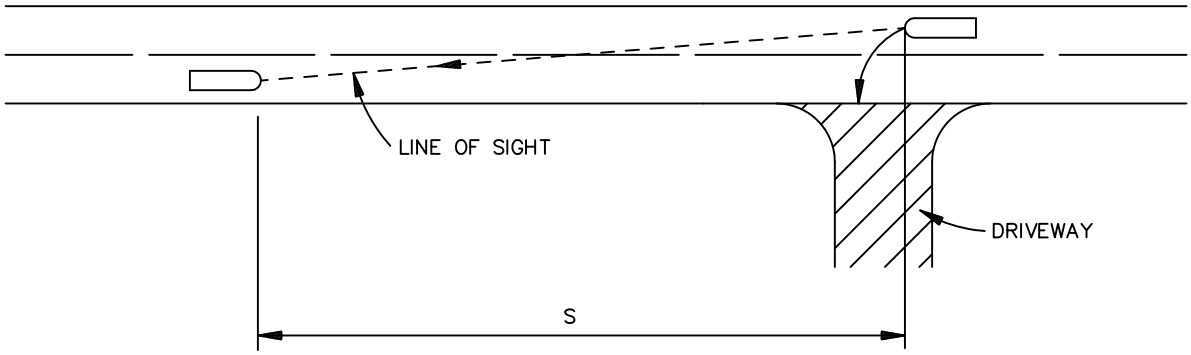

NOT TO SCALE

CITY OF TOMBALL
ENGINEERING & PLANNING DEPARTMENT

SIGHT DISTANCES FOR DRIVEWAY DESIGN

APPROVED BY COT:

ENGINEERING & PLANNING DEPARTMENT
EFFECTIVE JULY 1, 2010

SHEET 001OF 001 | DWG NO: COT DW-09

CAD FILE PATH:

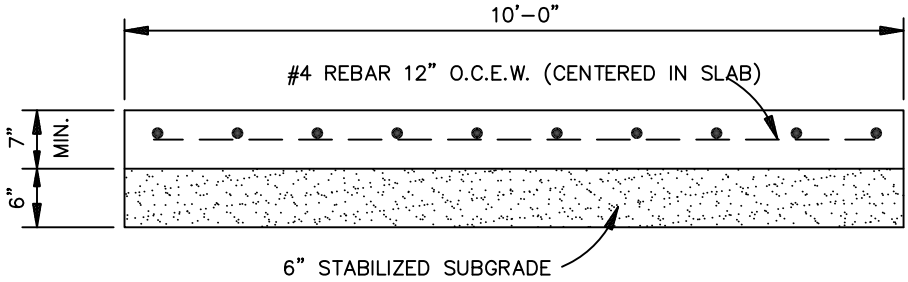

SECTION B-B

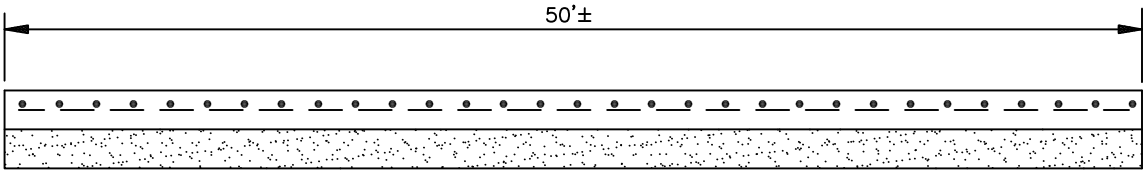

SECTION A-A

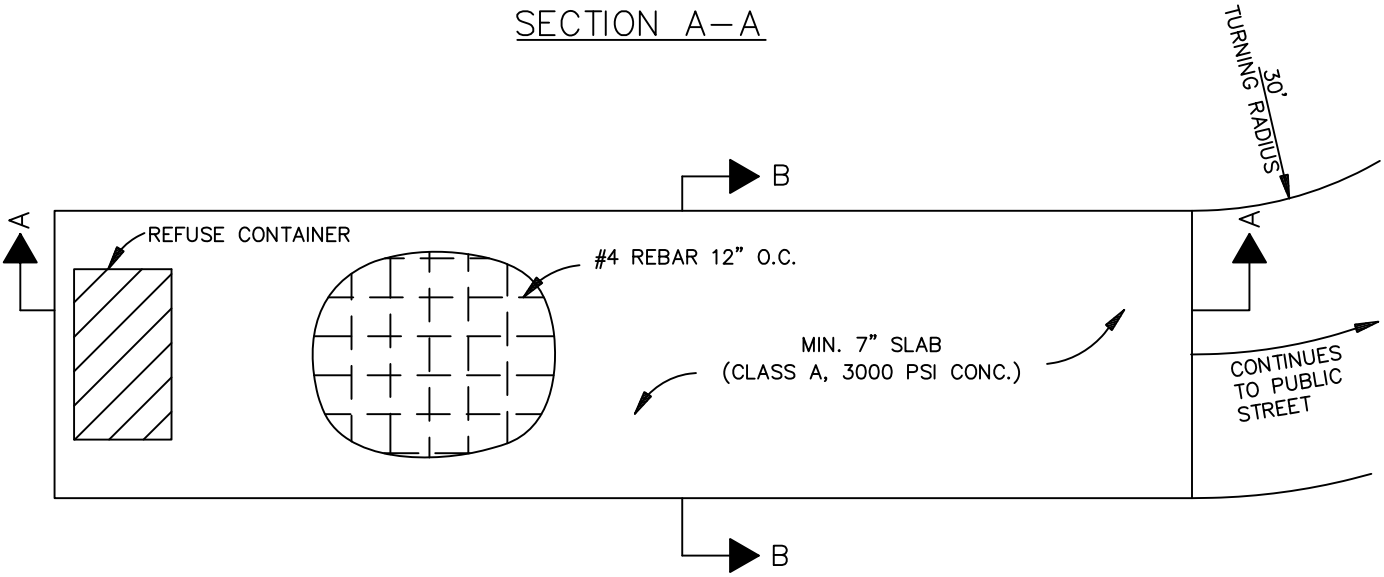

PLAN

REQUIREMENTS FOR CONTAINER LOCATION & PADS

STOW PAD AND LOCATION FOR DUMPSTER CONTAINERS ON ALL PLANS FOR BUSINESSES, COMMERCIAL BUILDINGS, SERVICE STATIONS, APT'S, ETC...

1. OVERHEAD CLEARANCE OF 20 FEET REQUIRED. a. NO OVERHEAD ELECTRICAL WIRES, OVERHANGS OR EAVES.
2. A MINIMUM 50 FOOT STRAIGHT APPROACH TO THE CONTAINER SHALL BE PROVIDED.
3. MINIMUM 3 FEET CLEAR SPACE EACH SIDE OF CONTAINER.
4. ADEQUATE TURN AROUND OR BACKING AREA SHALL BE OFF STREET R.O.W.
5. CONTAINER PAD AND CONTAINER CAN NOT BLOCK ROAD, STREET R.O.W., DRAINAGE DITCHES, TRAFFIC OR SIGHT TRIANGLE.
6. AREAS IN FRONT OF CONTAINER SHALL BE MARKED AS "NO PARKING ZONE" OR "TOW AWAY ZONE".
7. THE COLLECTION VEHICLE WEIGHS 64,000 LBS. THE DRIVEWAYS SHOULD BE CONSTRUCTED WITH THIS LOAD IN MIND. THE CITY IS NOT RESPONDSIBLE FOR DAMAGE TO PRIVATE PARKING LOTS OR DRIVEWAYS.
8. DUMPSTER SHOULD BE LOCATED AT THE REAR OF THE BUILDING.
9. ENCLOSURE PER ZONING ORDINANCE

NOT TO SCALE

CITY OF TOMBALL
ENGINEERING & PLANNING DEPARTMENT

REFUSE CONTAINER PAD CONSTRUCTION DETAILS

APPROVED BY COT:

ENGINEERING & PLANNING DEPARTMENT
EFFECTIVE JULY 1, 2010

SHEET 001 OF 001 | DWG NO: COT DW-10

CAD FILE PATH: