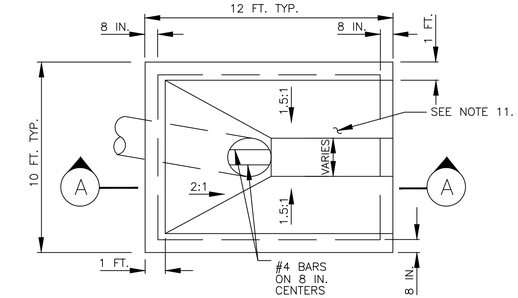

PLAN

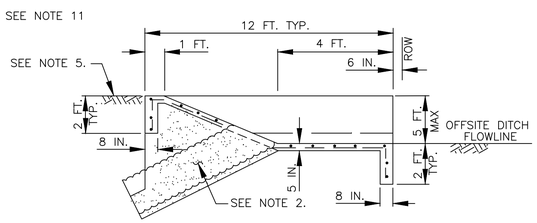

A SECTION

TYPICAL OFFSITE DITCH INTERCEPTOR STRUCTURE

(42 INCH MAX.)

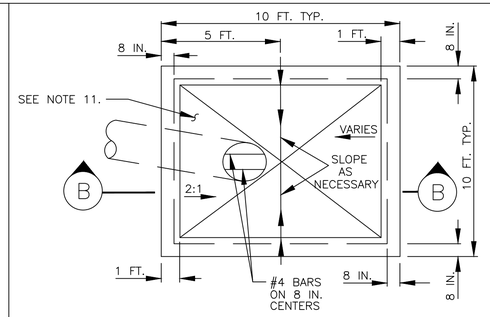

PLAN

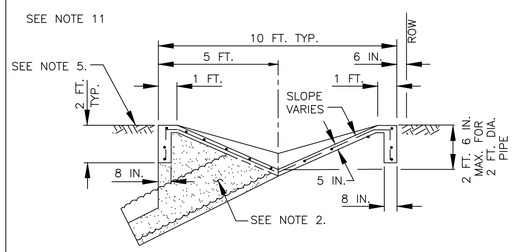

B SECTION

TYPICAL BACKSLOPE INTERCEPTOR STRUCTURE

(24 INCH & 30 INCH ONLY)

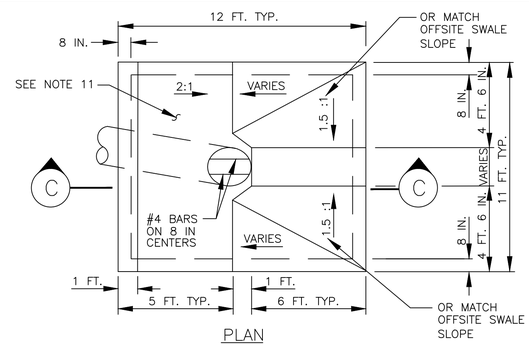

PLAN

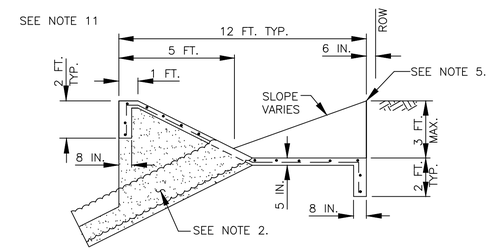

C SECTION

COMBINATION BACKSLOPE & OFFSITE DITCH INTERCEPTOR STRUCTURE

(42 INCH MAX.)

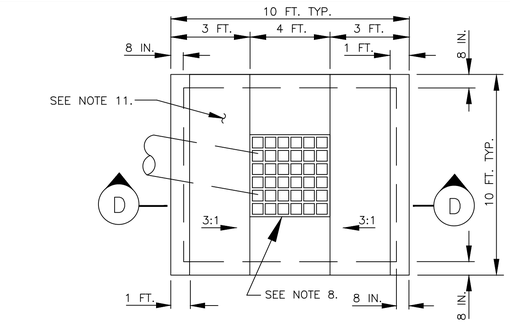

PLAN

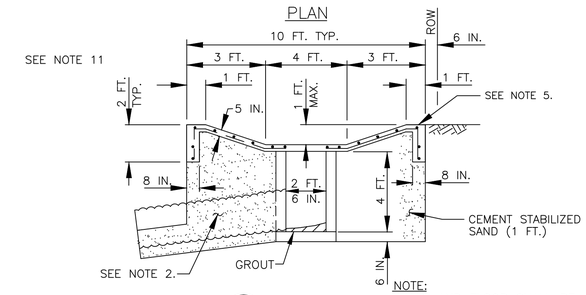

D SECTION

NOTE:
WALLS AND FLOOR SHALL BE 6 IN. REINFORCED STRUCTURAL CONCRETE OR WALLS MAY BE 8 IN. CONCRETE BRICK CONSTRUCTION

URBAN BACKSLOPE INTERCEPTOR STRUCTURE

(24 INCH ONLY)

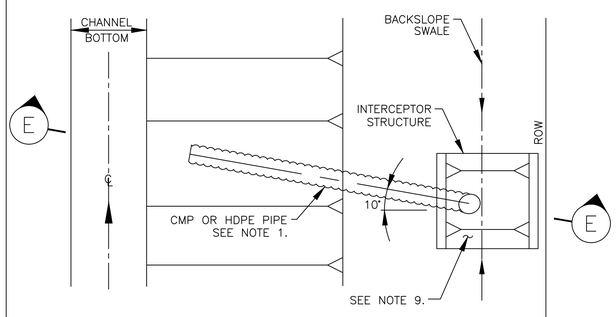

PLAN

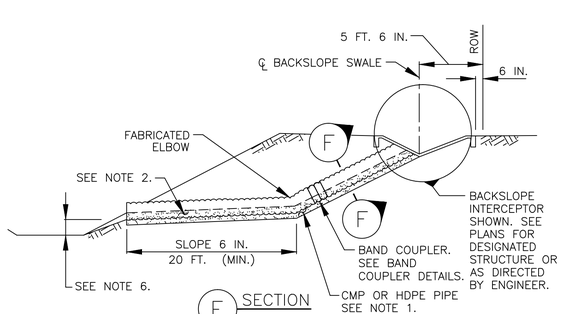

E SECTION

TYPICAL INTERCEPTOR OUTFALL STRUCTURE LAYOUT

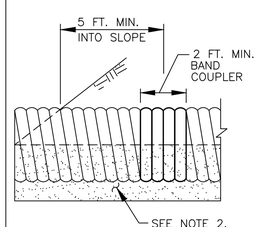

CMP BAND COUPLER DETAIL

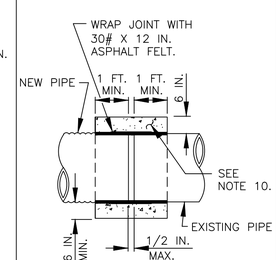

CONCRETE COLLAR DETAIL

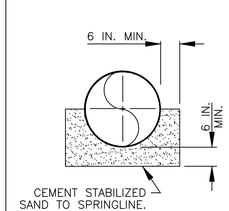

F SECTION

BEDDING CMP DETAIL

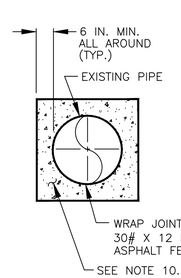

BEDDING CONCRETE PIPE DETAIL

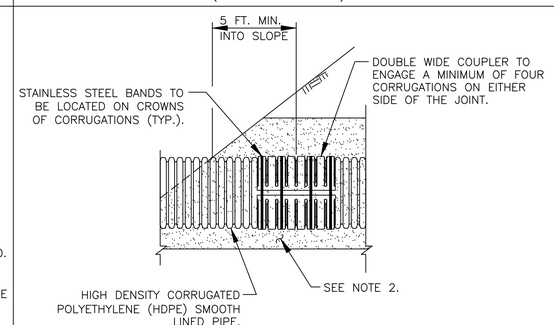

HDPE PIPE BAND COUPLER DETAIL

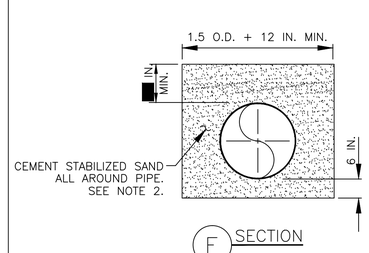

F SECTION

BEDDING HDPE PIPE DETAIL

INTERCEPTOR STRUCTURE DETAIL NOTES:

1. INTERCEPTOR OUTFALL PIPES WITHIN THE HCFCD RIGHT-OF-WAY SHALL BE CMP OR HDPE PIPE IN ACCORDANCE WITH SPECIFICATION SECTION 02642- CORRUGATED METAL PIPE, HIGH DENSITY POLYETHYLENE (HDPE) PIPE IN ACCORDANCE WITH SPECIFICATION SECTION 2505-HIGH DENSITY POLYETHYLENE, OR APPROVED EQUAL.
2. PROVIDE AND PLACE CEMENT STABILIZED SAND IN ACCORDANCE WITH SPECIFICATION SECTION 02321-CEMENT STABILIZED SAND AND SECTION 02316 - STRUCTURAL EXCAVATING.
3. EXCAVATION, FILL AND BACKFILL FOR STORM SEWER OUTFALLS SHALL BE IN ACCORDANCE WITH SPECIFICATION SECTION 02316-STRUCTURAL EXCAVATING AND BACKFILLING.
4. CONCRETE SHALL BE STRUCTURAL CONCRETE IN ACCORDANCE WITH SPECIFICATION SECTION 03310-CONCRETE.
5. INTERCEPTOR STRUCTURES:
   a. ADJUST LENGTH AND WIDTH IN FIELD AS NECESSARY.
   b. 2-FEET DEEP X 8-INCH WIDE TOE ALL AROUND THE STRUCTURE.
   c. STEEL REINFORCING-#4 BARS (GRADE 40) AT 12 INCHES ON CENTER EACH WAY.
   d. ANY INTERCEPTOR OUTFALL PIPE LARGER THAN MAXIMUM SIZE INDICATED REQUIRES A SEPARATE DETAIL.
   e. MATCH TOP OF CONCRETE WITH NATURAL GROUND.
6. SET FLOWLINE OF OUTFALL PIPES 1 FOOT ABOVE CHANNEL FLOWLINE OR 1 FOOT ABOVE NORMAL WATER SURFACE ELEVATION.
7. SEE CONCRETE CHANNEL LINING DETAIL SHEET FOR CMP OR HDPE OUTFALL DETAILS THROUGH CONCRETE CHANNEL LINING.
8. CONCRETE PAD AROUND TYPE "B" INLET: PAID FOR AS CONCRETE INTERCEPTOR STRUCTURE PER UNIT PRICE SCHEDULE. TYPE "B" INLET BOX, COH DWG. NO. 02632-02 WITH GRATE TOP, VULCAN FOUNDRY COMPANY, V-4880-1 OR APPROVED EQUAL, APPROX. 489 SQ.IN. OPENING.
9. BACKSLOPE SWALE AND INTERCEPTOR STRUCTURE ELEVATIONS AND LOCATIONS SHOWN ON THE PLANS ARE APPROXIMATE. FINAL ELEVATIONS AND LOCATIONS SHALL BE FIELD VERIFIED BY THE ENGINEER PRIOR TO INSTALLATION.
10. STRUCTURAL CONCRETE WITH #4 BARS (GRADE 40) 12 INCH O.C. EACH WAY - FOR COLLARS ONLY.
11. EPOXY CLEAN WATER CLEAR CHOICE LOGO BUTTON ON INTERCEPTORS. LOCATION TO BE DETERMINED BY THE ENGINEER.

THIS DETAIL SHEET HAS BEEN PREPARED FOR USE ON HCFCD PROJECTS OR PROJECTS TO BE MAINTAINED BY THE HCFCD WHEN COMPLETED BY OTHERS. AN ENGINEER WHO INCORPORATES THE DETAILS ON THIS SHEET BECOMES RESPONSIBLE FOR ITS USE IN THE END PRODUCT IN ACCORDANCE WITH RULE §137.33 (b) AND (c) OF THE TEXAS STATE BOARD OF REGISTRATION FOR PROFESSIONAL ENGINEERS.

P.E. SEAL AND SIGNATURE

REV	DESCRIPTION	DATE	APPR
1.	TYPICAL INTERCEPTOR OUTFALL STRUCTURE LAYOUT	11/21/05	

INTERCEPTOR STRUCTURE DETAILS

PREPARED: CHECKED: APPROVED:

Harris County Flood Control District
9900 Northwest Freeway
Houston, Texas 77092

DATE: 11-21-05
SCALE: NTS

SHEET NUMBER
- OF -

COT STM-29